Spare Part List

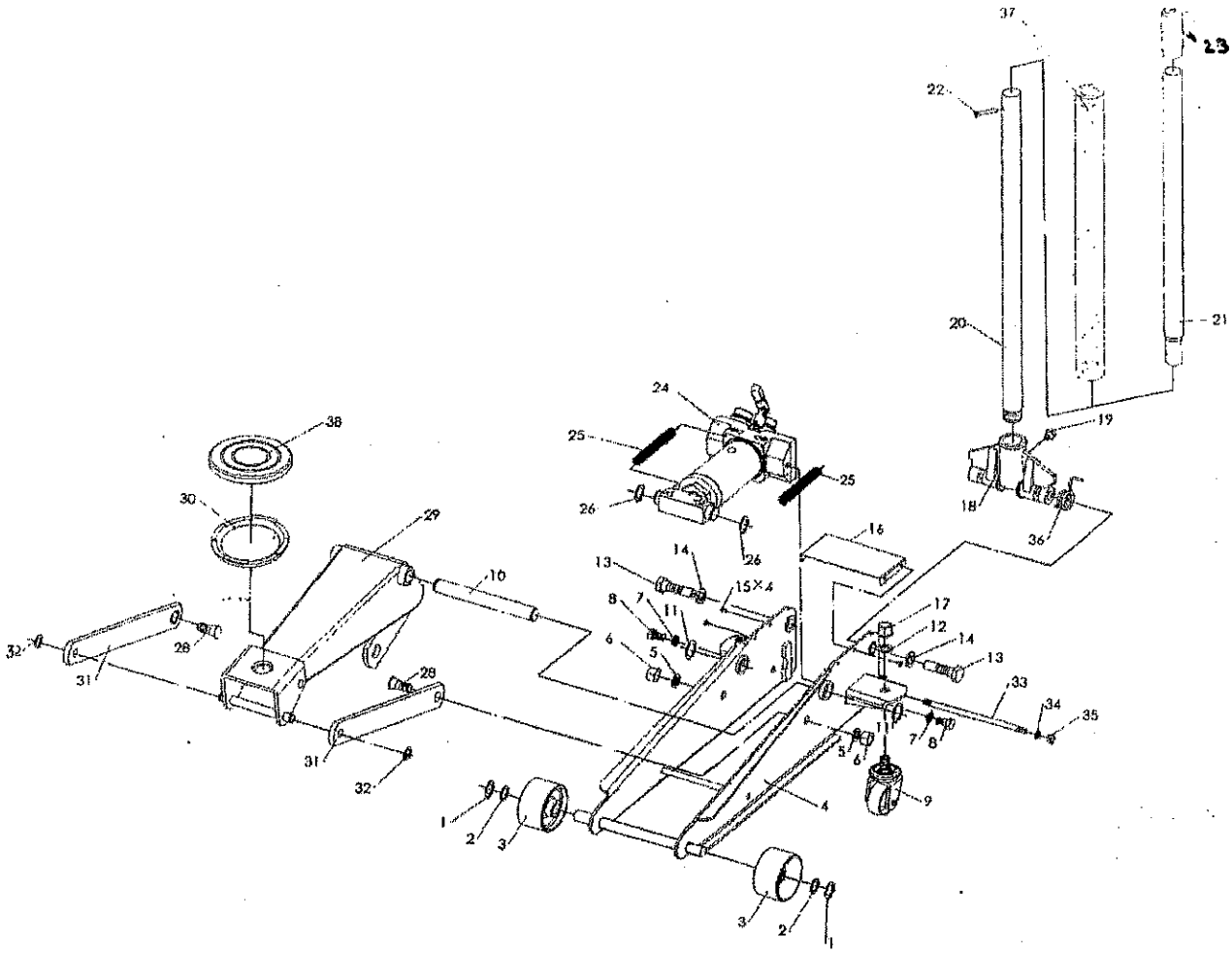

Y420303

Pos.	Art. Nummer	Omschrijving	Pos.	Art. Nummer	Omschrijving
1	Y420303-1	Retaining ring	20	Y420303-20	Lower Handle
2	Y420303-2	Washer	21	Y420303-21	Upper Handle
3	Y420303-3	Wheel	22	Y420303-22	Bolt M6x35
4	Y420303-4	Side Plate Assy.	23	Y420303-23	Top Cover
5	Y420303-5	Washer	24	Y420303-24	Power unit assy
6	Y420303-6	Nut M16	25	Y420303-25	Spring
7	Y420303-7	Spring Washer	26	Y420303-26	Retaining Ring
8	Y420303-8	Bolt M12x20	27	Y420303-27	Block linkage
9	Y420303-9	Rear Caster Assy.	28	Y420303-28	Bolt
10	Y420303-10	Shaft Arm	29	Y420303-29	Lifting Arm
11	Y420303-11	Retaining ring	30	Y420303-30	Saddle
12	Y420303-12	Spring Washer	31	Y420303-31	Long Linkage
13	Y420303-13	Bolt	32	Y420303-32	Retaining Ring
14	Y420303-14	Spring washer	33	Y420303-33	Pull Rod
15	Y420303-15	Spring washer	34	Y420303-34	Washer
16	Y420303-16	Cover	35	Y420303-35	Nut M12
17	Y420303-17	Nut M16	36	Y420303-36	Torsion Spring
18	Y420303-18	Handle Socket	37	Y420303-37	HANDLE Bumper
19	Y420303-19	Bolt	RK	Y420303-RK	Repair kit