Please read and save these instructions. Read carefully before attempting to assemble, install, operate or maintain the product described. Protect yourself and others by observing all safety information. Failure to comply with instructions could result in personal injury and/or property damage! Retain instructions for future reference.

Westward® Hydraulic Engine Cranes

Description

Westward hydraulic engine cranes are for lifting, lowering, and relocating loads to suitable support devices such as an engine stand. Power Units are equipped with built-in pressure overload bypass and metered release valve enabling the operator to lower the boom at a controlled rate of speed. Applications include removal and installation of automotive and light truck engines and assemblies. Cranes can be knocked down for storage or relocation and reassembled. 3ZC72K features space saver design for compact storage. These cranes are designed to meet applicable ANSI/PALD Standards.

Specifications

Model	Ext. Boom Lock Position*	Capacity	Hook Height Min.	Hook Height Max.	Boom Length
3ZC71H	P1	2 Ton	18 3/8"	69-1/4"	48-3/4"
	P2	1-1/2 Ton	14"	75"	57-3/4"
	P3	1 Ton	9-1/4"	81"	66-3/4"
	P4	1/2	5"	86-1/2"	76-3/4"
3ZC72K	P1	1 Ton	12"	85-3/8"	47"
	P2	3/4 Ton	6-1/4"	87-3/4"	53"
	P3	1/2 Ton	3/4"	90-1/2"	59"
5Z010G	P1	3/4 Ton	9-5/8"	78-1/8"	38-1/8"
	P2	1/2 Ton	5-7/8"	80-3/4"	42-1/8"
	P3	1/4 Ton	2"	83-1/2"	46-1/2"

NOTE: Lift capacity diminishes as boom length is extended.

(*) Various boom lock positions are indicated on the boom extension.

General Safety Information

⚠ WARNING ***Before using this product read, understand, and follow all printed materials provided with, and on this device. This crane is designed for lifting and lowering automotive and light truck engines and assemblies only. Do not use as a load support device. Immediately transfer the load to appropriately rated support device such as an engine stand or work bench capable of supporting rated capacity loads.***

Do not exceed rated capacity. Use only on a hard, level surface. For model 3ZC71H, never extend boom extension beyond leg extension. Before moving, lower the load to the lowest possible point. Use only slings or chains with a rated capacity equal to or greater than that of the shop crane. Do not allow load to swing or drop violently while moving or lowering. No alterations shall be made to this product. Use only those adapters and accessories provided by the crane manufacturer. Never work on, under, or around a load supported by this device. Failure to heed these warnings may result in personal injury and/or property damage.

NOTE: When removing an engine from a vehicle, ensure that the front of the vehicle is not jammed up against any part of the crane.

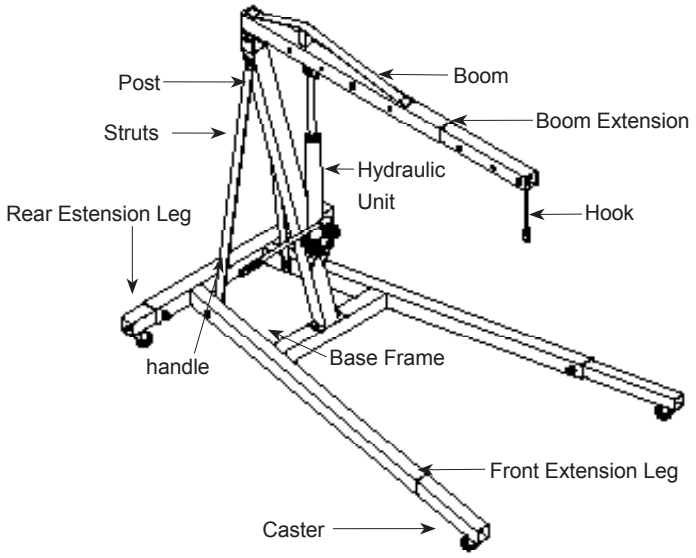

Figure 1 — Typical Engine Crane Components (3ZC71H shown)

SHI 001
Printed in China
02/10

Westward® Hydraulic Engine Cranes

IMPORTANT: Reference numbers are for assembly purposes only. See appropriate replacement parts illustration of your model for parts ordering.

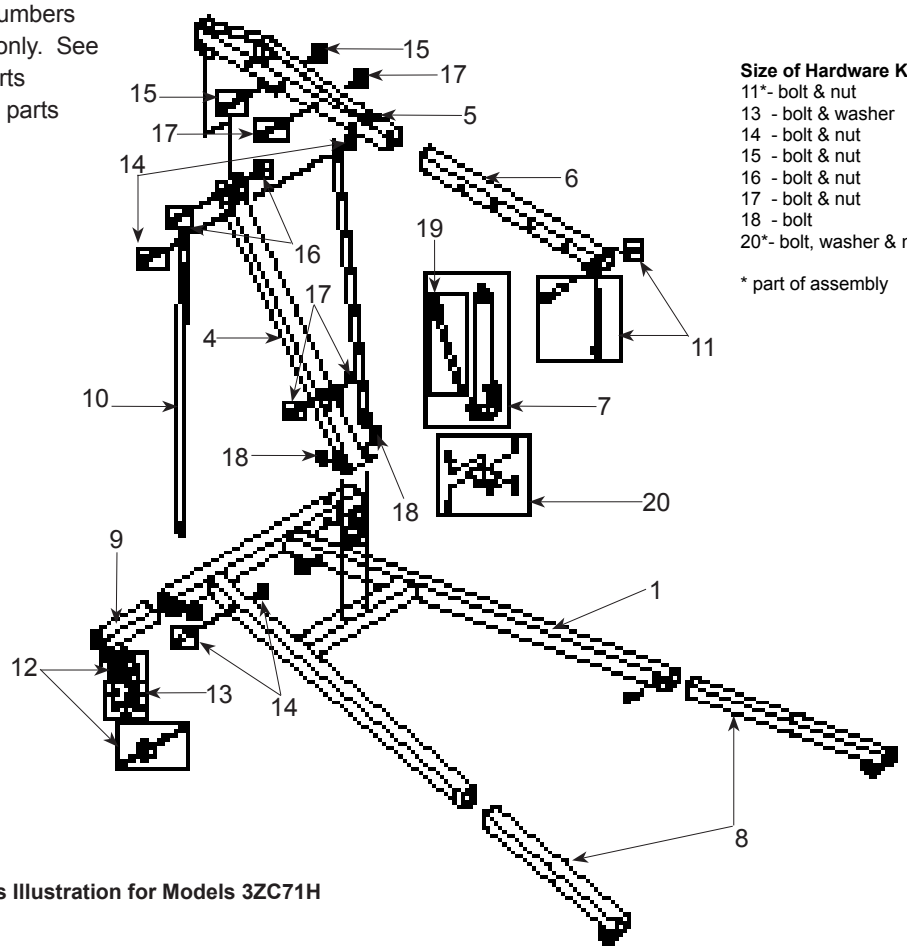

Size of Hardware Kits

11*- bolt & nut	- M12X75 & M12
13 - bolt & washer	- M8X16
14 - bolt & nut	- M12X90 & M12
15 - bolt & nut	- M16X90 & M16
16 - bolt & nut	- M20X120 & M20
17 - bolt & nut	- M16X90 & M16
18 - bolt	- M12X25
20*- bolt, washer & nut	- M10X30 & M10

* part of assembly

Figure 2 — Assembly Parts Illustration for Models 3ZC71H

Assembly

MODEL 3ZC71H (Refer to Figure 2)

1. Attach swivel casters (No.12) to front extension legs (No.8) and rear extension legs (No.9) with washers and bolts (No.13).

NOTE: Do not tighten any bolts unless told to do so.

2. Place rear extension leg & front extension legs inside base frame (No.1) with caster facing down and secure with bolt in frame, tighten bolts.
3. Place post (No.4) on the base frame and secure with bolts (No.18).
4. Put struts (No.10) on each side of post at top and secure with bolt and nut (No.14). Do not tighten. Place bottom of support on inside of base frame and secure with bolt and nut. (No.14).
5. Attach base bracket (No. 20) to hydraulic unit (No.7) with bolts and nuts.
6. Attach hydraulic unit assembly on post using bolt and nut (No.17).
7. Place boom (No.5) on top of post and secure with bolt and nut (No.16). Pump ram using handle (No.19) until ram is approximately 2” above top. Place front mounting bracket on boom, on top of ram and secure with bolt and nut (No.15). Tighten all bolts in step 8 and step 9.
8. Slide boom extension (No.6) inside of boom, making sure slot for chain & hook assembly (No.11) faces down and secure with bolt and nut (No.17) in correct hole on boom for your particular job.
9. Slide chain and hook through slot in lower front of boom extension and secure with bolt and nut (No.11).

NOTE: Check all bolts and nuts for tightness, including those pre-assembled at the factory. Tighten where required.

Models 3ZC71H, 3ZC72K and 5Z010G

IMPORTANT: Reference numbers are for assembly purposes only. See appropriate replacement parts illustration of your model for parts ordering.

Size of Hardware Kits

8* - bolt, washer & nut - M12X65 & M12
10*- bolt & washer - M8 X 16
15 - bolt & washer - M8X16
17*- bolt, washer & nut - M12X65 & M12
18*- bolt, washer & nut - M12X65 & M12
19 - bolt, washer & nut - M16X90 & M16
20 - bolt, washer & nut - M20X100 & M20
21 - bolt, washer & nut - M12X90 & M12
22 - bolt, washer & nut - M16X70 & M16
23 - bolt & washer - M12X70
24 - bolt & washer - M12X30
25 - bolt, washer & nut - M8X16 & M8
27* - bolt, washer & nut - M10X30 & M10

* part of assembly

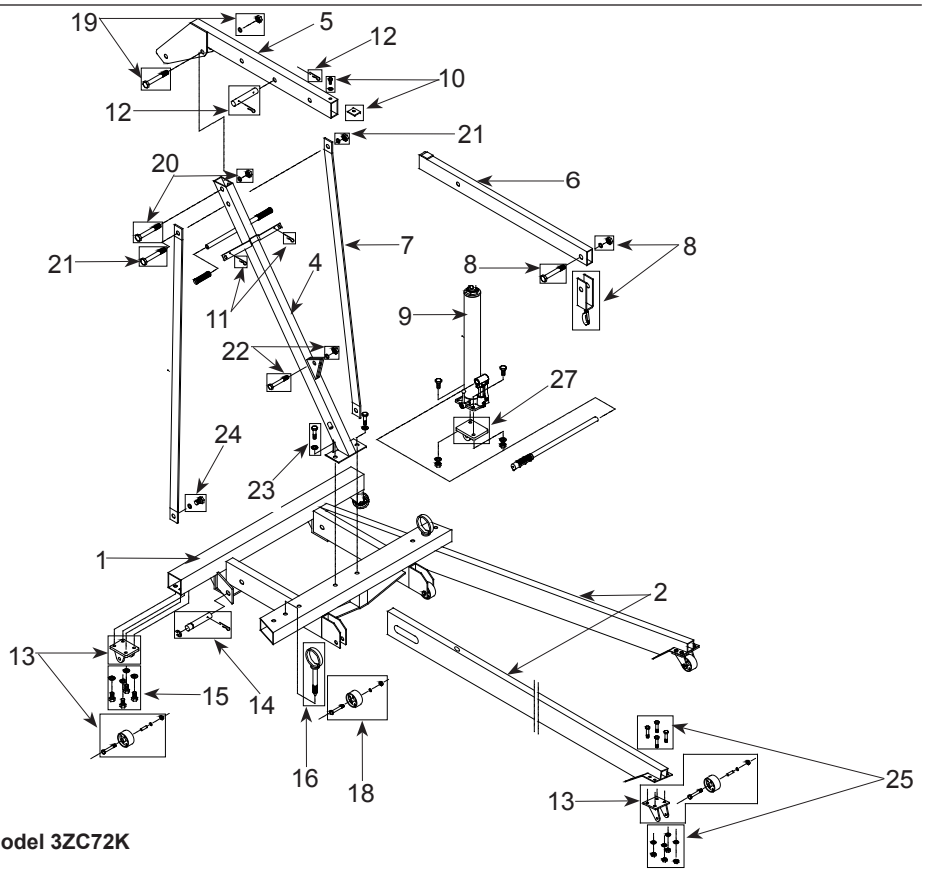

Figure 3 — Assembly Parts Illustration for Model 3ZC72K

MODEL 3ZC72K (Refer to Figure 3)

1. Install 3 3/8" wheels (No.18) and casters (No.13 & 15) to base frame (No.1) using bolts, washers and nuts.
2. Install casters (No.13) to front legs (No.2) using bolts, washers and nuts (No.25).
3. Attach front legs (No.2) to base frame using bolt pin, lock washers and bolts (No.14 & 16).

NOTE: Do not tighten any bolts unless told to do so.

4. Attach post (No.4) to base frame using bolts and washers (No.23). Post must lean towards the rear of the base frame as shown. Leave nuts finger tight.
5. Attach struts (No.7) to post with bolt and nut (No.21). Leave nut finger tight.
6. Attach struts to inside of base frame with two bolts and nuts (No.24).
7. Tighten post to base frame. Now proceed to fully tighten strut to post and strut to base frame bolts.
8. Install hydraulic unit (No.9) to the base bracket (No.27) with two bolts and nuts.
9. Position hydraulic unit with base bracket between mounting ears on post, and attach using bolt and nut (No.22)

NOTE: Handle socket of hydraulic unit must face the front of the base frame as shown. Tighten nut. Lean hydraulic unit assembly back against post.

10. Connect boom (No.5) to post using bolt and nut (No.20).
11. Hold boom and pivot hydraulic unit out away from post and position ram between mounting bracket on boom. Attach hydraulic unit to boom with bolt and nut (No.19). Tighten nut.
12. Slide boom extension (No.6) into boom and secure in retracted position using lock pin and "R" pin (No.12).
13. Slide square washer (No.10) into boom using bolt and washer.
14. Insert hook (No.8) to boom extension using bolt and nylon nut.

NOTE: Check all bolts and nuts for tightness, including those pre-assembled at the factory. Tighten where required.

FRONT LEG STORAGE POSITION

Remove pins from base and pull front legs out and up to post. Use "R" lock pin assemblies for storage.

Westward® Hydraulic Engine Cranes

IMPORTANT: Reference numbers are for assembly purposes only. See appropriate replacement parts illustration of your model for parts ordering.

Size of Hardware Kits
8* - bolt, washer & nut - M12X70 & M12
10*- bolt - M8 X 16
15 - bolt, washer & nut - M8X16 & M8
17*- bolt, washer & nut - M12X70 & M12
19 - bolt, washer & nut - M12X85 & M12
20 - bolt, washer & nut - M16X90 & M16
21 - bolt, washer & nut - M12X70 & M12
22 - bolt, washer & nut - M14X65 & M14
23 - bolt, washer & nut - M10X60 & M10
24 - bolt, washer & nut - M12X30 & M12
25 - bolt, washer & nut - M12X70 & M12
27 - bolt & washer - M12X20
29* - bolt, washer & nut - M8X30 & M8

* part of assembly

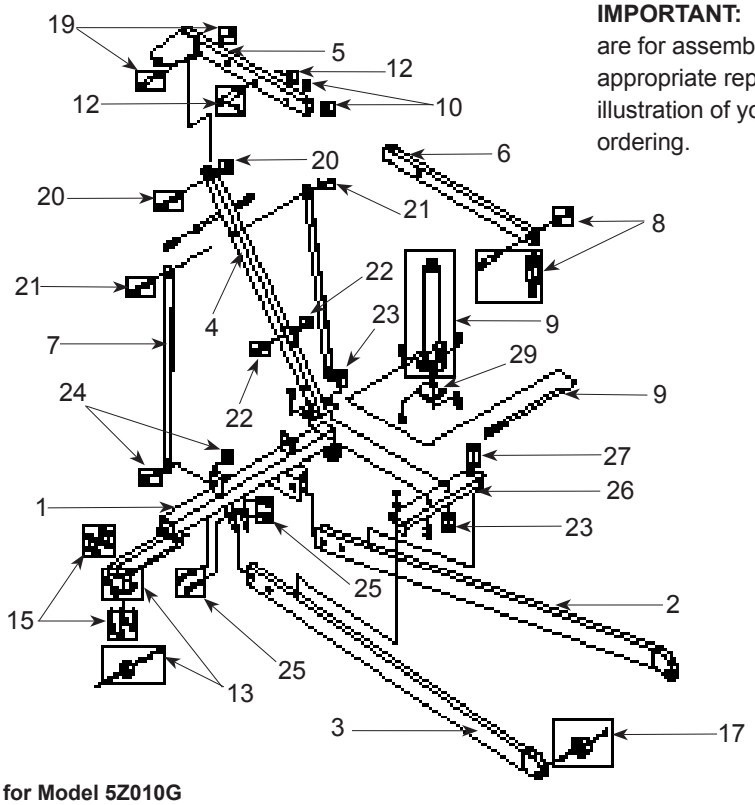

Figure 4 — Assembly Parts Illustration for Model 5Z010G

MODEL 5Z010G (Refer to Figure 4)

1. Attach swivel casters (No.13) to rear support (No.1) with bolts, nuts and washers (No.15).
2. Attach wheel (No.17) to front legs (No.2 & 3) with bolts and nuts.

NOTE: Do not tighten any bolts unless told to do so.

3. Attach front legs (No.2 & 3) to rear support (No.1) with bolts and nuts (No.25).
4. Place post support (No.26) on front legs and secure with bolts and washers (No.27).
5. Place post (No.4) on post support (No.26) and secure with bolts and nuts (No.23).
6. Put strut (No.7) on each side of post, secure the top with bolts and nuts (No.21), place angled portion of support on inside of each front leg and secure with bolt and nut (No.24).
7. Attach boom (No.5) on post with bolt and nut (No.20).
8. Attach base bracket (No.29) to hydraulic unit (No.9) with bolts and nuts. Place the hydraulic unit with base bracket to post, secure with bolt and nut (No.22) then pump the unit up until it reaches the boom and attach the upper part of unit to boom with bolt and nut (No.19).
9. Slide boom extension (No.6) inside of boom (No.5), secure square washer (No.10) and bolt and lock washer (No.10), and secure the boom extension to boom in correct hole for particular job with lock pin and “R” pin (No.12).
10. Attach hook (No.8) to boom extension (No.6) with bolt and nut.
11. Tighten all bolts and nuts, the engine crane is ready for use.

IMPORTANT: Use boom in its retracted position whenever possible. Extend boom only when necessary to reach load. Be sure load is within capacity limit for boom position selected. If load is to be moved to another location, raise only high enough to clear floor, move crane slowly and avoid sudden stop that could cause load to swing (all models) violently.

Models 3ZC71H, 3ZC72K and 5Z010G

Operation

PURGE AIR PRIOR TO OPERATION

Sometimes during shipment and/or handling, air gets into hydraulic system causing poor lifting performance. To correct this:

1. Open release valve by turning it counterclockwise two full turns.
2. Pump hydraulic unit about 6 full strokes.
3. Close release valve and continue pumping until boom has raised several feet.
4. Open release valve and slowly lower boom.

NOTE: Avoid overtightening release valve - the tighter it is closed the harder it is to crack open for very slow lowering.

OPERATING THE CRANE

NOTE: Capacity of crane varies with boom position. (See boom or Specifications chart.)

1. Use boom in its retracted position, whenever possible.
2. Extend boom only when necessary to reach load.
3. Be sure load is within capacity limit for boom position selected.
4. Close release valve (do not overtighten) and pump to raise load to desired height.

IMPORTANT: If load is to be moved to another location, raise only high enough to clear floor. Move crane slowly and avoid sudden stops that could cause load to swing violently.

CHANGING BOOM EXTENSION

Do not try to change boom position while under load. Do not exceed load capacity.

NOTE: Check load rating located on boom or on Specifications chart.

1. Place boom in horizontal position.
2. Move boom and secure with pin and “R” clip.

Maintenance

GENERAL

1. Avoid overloads.
2. Keep hook clean and inspect occasionally for damage.
3. Oil all moving joints periodically (at least every 30 days) with a medium weight machine oil or motor oil.
4. Keep sufficient hydraulic jack oil in reservoir.

⚠ WARNING ***Do not use brake or shock absorber fluids. They have ingredients harmful to the jack’s oil seals.***

ADDING OIL

1. Make sure boom is in lowered position.
2. Remove oil fill plug from hydraulic unit.
3. Squirt clean hydraulic jack oil into hole.

NOTE: In most cases, the addition of a few ounces of oil is sufficient.

4. Fill to level of filler hole. **Do Not Overfill.**

RUST PREVENTION

1. Check ram and plunger every 3 months for rust or corrosion.
2. Clean as needed and wipe with an oily cloth.

NOTE: When not in use always position boom and pump plunger all the way down.

STORAGE

When not in use, store the crane with the legs folded and secured with the bolt pins and “R” lock pins (Model 3ZC72K only).

NOTE: ***If necessary to move the crane with legs in the storage position, do so with care and only across a smooth, level, seamless surface.***

See illustration below for details of securing legs for storage.

Westward Hydraulic Engine Cranes

Troubleshooting Chart

Symptom	Possible Cause(s)	Corrective Action
Crane will not lift load	1. Release valve not tightly closed 2. Overload condition	1. Ensure release valve tightly closed 2. Remedy overload condition
Crane will lift, but not maintaining pressure	1. Release valve not tightly closed 2. Overload condition 3. Hydraulic unit malfunctioning	1. Ensure release valve tightly closed 2. Remedy overload condition 3. Replace
Crane will not lower after unloading	1. Reservoir overfilled 2. Linkages binding	1. Drain fluid to proper level 2. Clean and lubricate moving parts
Poor lift performance	1. Fluid level low 2. Air trapped in system	1. Ensure proper fluid level 2. With ram fully retracted, remove oil filler plug to let pressurized air escape, reinstall oil filler plug
Will not lift to full height	1. Fluid level low	1. Ensure proper fluid level

For Repair Parts, call 1-800-323-0620

24 hours a day - 365 days a year

Please provide following information:
-Model number
-Serial number (if any)
-Part descriptions and number as shown in parts list

Address parts correspondence to:
Grainger Parts
P.O. Box 3074
1657 Shermer Road
Northbrook, IL 60065-3074 U.S.A.

IMPORTANT: Boom lock positions and load rating are indicated on boom.

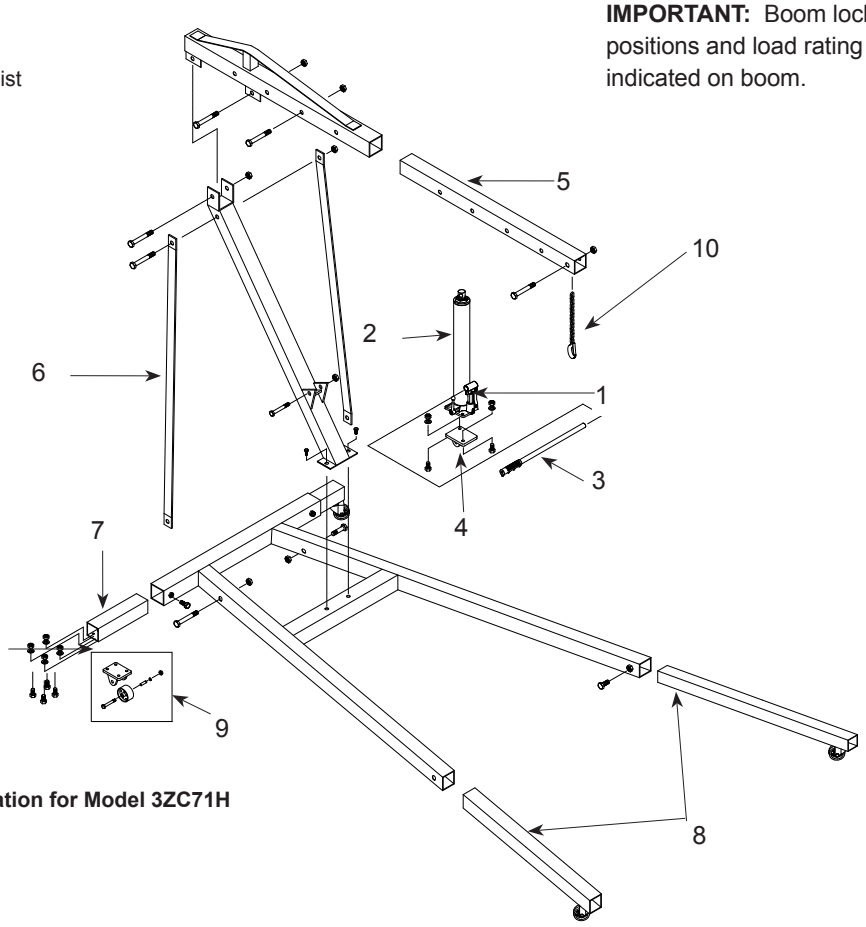

Figure 5 — Repair Parts Illustration for Model 3ZC71H

Repair Parts List

Reference Number	Description	Part Number For Model: 3ZC71H (2 Ton)	Quantity
1	Hydraulic Unit	BL80-60000-000	1
2	Oil Filler Plug	5905-00100-200	1
3	Pump Handle	BL80-20000-000	1
4	Hydraulic Unit Bracket	T473-00005-000	1
5	Boom Extension	T473-00006-000	1
6	Braces	T473-00001-000	2
7	Rear Leg Extension	T473-40000-100	2
8	Frong Leg Extension	T473-50000-100	2
9	Caster, 3-1/2"	T473-04000-000	4
10	Hook Assembly	T473-05000-000	1
•	Hardware Kit	T473-06000-000	1
**	Seal Kit, Hydraulic Unit	BL800S-034	1

For Repair Parts, call 1-800-323-0620

24 hours a day - 365 days a year

Please provide following information:
-Model number
-Serial number (if any)
-Part descriptions and number as shown in parts list

Address parts correspondence to:
Grainger Parts
P.O. Box 3074
1657 Shermer Road
Northbrook, IL 60065-3074 U.S.A.

IMPORTANT: Boom lock positions and load rating are indicated on boom.

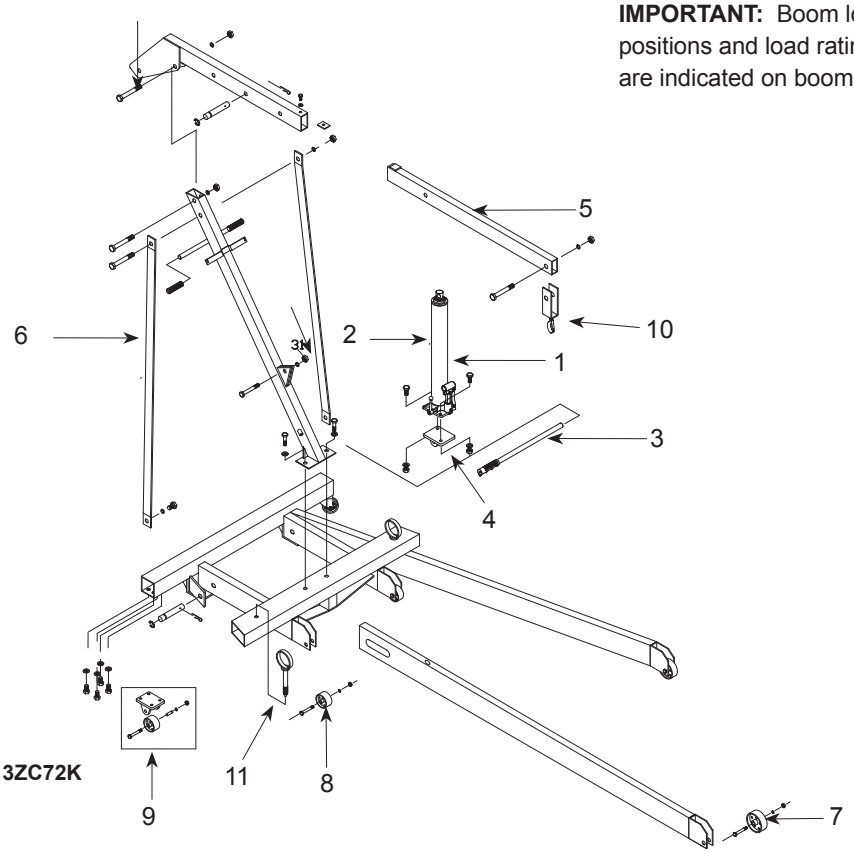

Figure 6 — Repair Parts Illustration for Model 3ZC72K

Repair Parts List

Reference Number	Description	Part Number For Model: 3ZC72K (1 Ton)	Quantity.
1	Hydraulic Unit	BL80-50000-000	1
2	Oil Filler Plug	5905-00100-100	1
3	Pump Handle	BL80-20000-000	1
4	Hydraulic Unit Bracket	T473-00005-000	1
5	Boom Extension	T474-08000-000	1
6	Braces	T474-00001-000	1
7	Front Wheel, 3-1/2"	T474-00002-000	2
8	Middle Wheel. 3-1/2"	T474-00002-000	2
9	Caster, 3-1/2"	T474-04000-000	2
10	Hook Assembly	T474-07000-000	1
11	Lock Pin	T474-03000-000	2
•	Hardware Kit	T474-50000-000	1
**	Seal Kit, Hydraulic Unit	BL800S-034	1

For Repair Parts, call 1-800-323-0620

24 hours a day - 365 days a year

Please provide following information:
-Model number
-Serial number (if any)
-Part descriptions and number as shown in parts list

Address parts correspondence to:
Grainger Parts
P.O. Box 3074
1657 Shermer Road
Northbrook, IL 60065-3074 U.S.A.

IMPORTANT: Boom lock positions and load rating are indicated on boom.

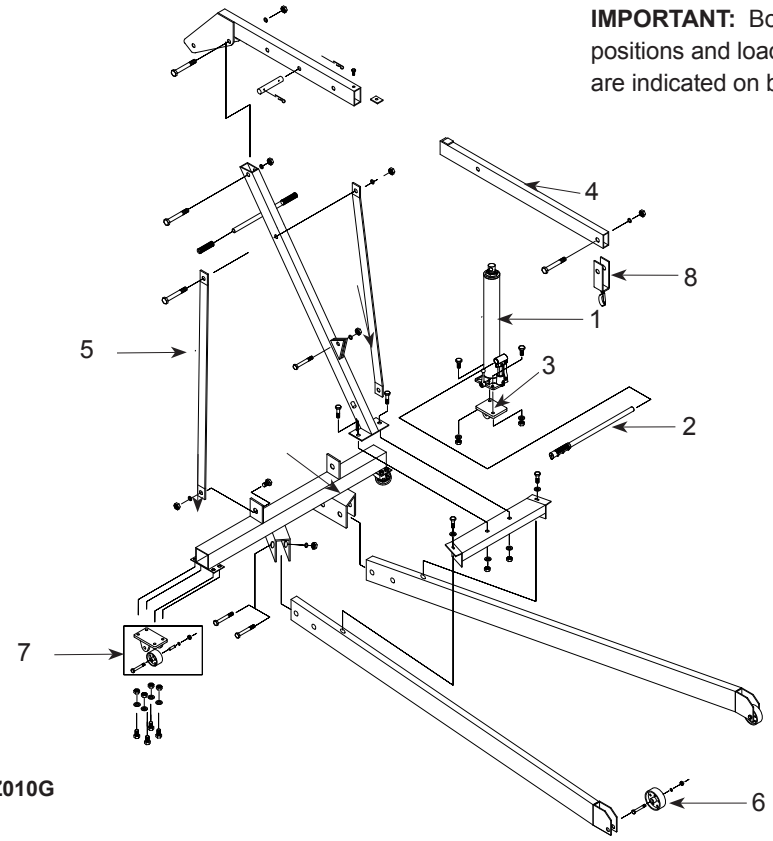

Figure 7 — Repair Parts Illustration for Model 5Z010G

Repair Parts List

Reference Number	Description	Part Number For Model: 5Z010G (3/4 Ton)	Quantity
1	Hydraulic Unit	BL40-40000-000	1
2	Pump Handle	BL80-20000-000	1
3	Hydraulic Unit Bracket	T010-00005-000	1
4	Boom Extension	T077-10000-000	1
5	Braces	T077-00001-000	1
6	Front Wheel, 3-1/2"	T474-90004-K18	2
7	Caster,	T474-04000-000	2
8	Hook Assembly, Chain and Hook	T375-50000-000	1

Westward® Hydraulic Engine Cranes

LIMITED WARRANTY

WESTWARD ONE-YEAR LIMITED WARRANTY. *Hydraulic Engine Cranes, Models covered in this manual, are warranted by Westward to the original user against defects in workmanship or materials under normal use for one year after date of purchase. Any part which is determined to be defective in material or workmanship and returned to an authorized service location, as Westward designates, shipping costs prepaid, will be, as the exclusive remedy, repaired or replaced at Westward's option. For limited warranty claim procedures, see PROMPT DISPOSITION below. This limited warranty gives purchasers specific legal rights which vary from jurisdiction to jurisdiction.*

LIMITATION OF LIABILITY. *To the extent allowable under applicable law, Westward's liability for consequential and incidental damages is expressly disclaimed. Westward's liability in all events is limited to and shall not exceed the purchase price paid.*

WARRANTY DISCLAIMER. *Westward has made a diligent effort to provide product information and illustrate the products in this literature accurately; however, such information and illustrations are for the sole purpose of identification, and do not express or imply a warranty that the products are MERCHANTABLE, or FIT FOR A PARTICULAR PURPOSE, or that the products will necessarily conform to the illustrations or descriptions.*

Except as provided below, no warranty or affirmation of fact, expressed or implied, other than as stated in the "LIMITED WARRANTY" above is made or authorized by Westward.

PRODUCT SUITABILITY*. Many jurisdictions have codes and regulations governing sales, construction, installation, and/or use of products for certain purposes, which may vary from those in neighboring areas. While Westward attempts to assure that its products comply with such codes, it cannot guarantee compliance, and cannot be responsible for how the product is installed or used. Before purchase and use of a product, review the product applications, and all applicable national and local codes and regulations, and be sure that the product, installation, and use will comply with them.*

Certain aspects of disclaimers are not applicable to consumer products; e.g., (a) some jurisdictions do not allow the exclusion or limitation of incidental or consequential damages, so the above limitation or exclusion may not apply to you; (b) also, some jurisdictions do not allow a limitation on how long an implied warranty lasts, consequentially the above limitation may not apply to you; and (c) by law, during the period of this limited warranty, any implied warranties of implied merchantability or fitness for a particular purpose applicable to consumer products purchased by consumers, may not be excluded or otherwise disclaimed.

PROMPT DISPOSITION*. Westward will make a good faith effort for prompt correction or other adjustment with respect to any product which proves to be defective within limited warranty. For any product believed to be defective within limited warranty, first write or call dealer from whom the product was purchased. Dealer will give additional directions. If unable to resolve satisfactorily, write to Westward at address below, giving dealer's name, address, date, and number of dealer's invoice, and describing the nature of the defect. Title and risk of loss pass to buyer on delivery to common carrier. If product was damaged in transit to you, file claim with carrier.*

Manufactured for Grainger International, 100 Grainger Pkwy., Lake Forest, Illinois 60045 U.S.A.

Notes

Notes