SPX POWER TEAM® OTC®

SPX Corporation
5885 11th Street
Rockford, IL 61109-3699 USA

Internet Address:
http://www.powerteam.com
Tech. Services: (800) 477-8326
Fax: (800) 765-8326
Order Entry: (800) 541-1418
Fax: (800) 288-7031

SPX Corporation
655 Eisenhower Drive
Owatonna, MN 55060-0995 USA
Phone: (507) 455-7000
Tech. Services: (800) 533-6127
Fax: (800) 955-8329
Order Entry: (507) 455-1480
Fax: (800) 283-8665
International Sales: (507) 455-7223
Fax: (507) 455-7746

Form No. 101342

Parts List for:

51684
RD1506
RD1506-VLCEK
RD15013
RD15013-VLCEK

MODEL B
DOUBLE-ACTING

HYDRAULIC CYLINDER

Max. Capacity: 153.4 Tons at 10,000 PSI

To Parts List

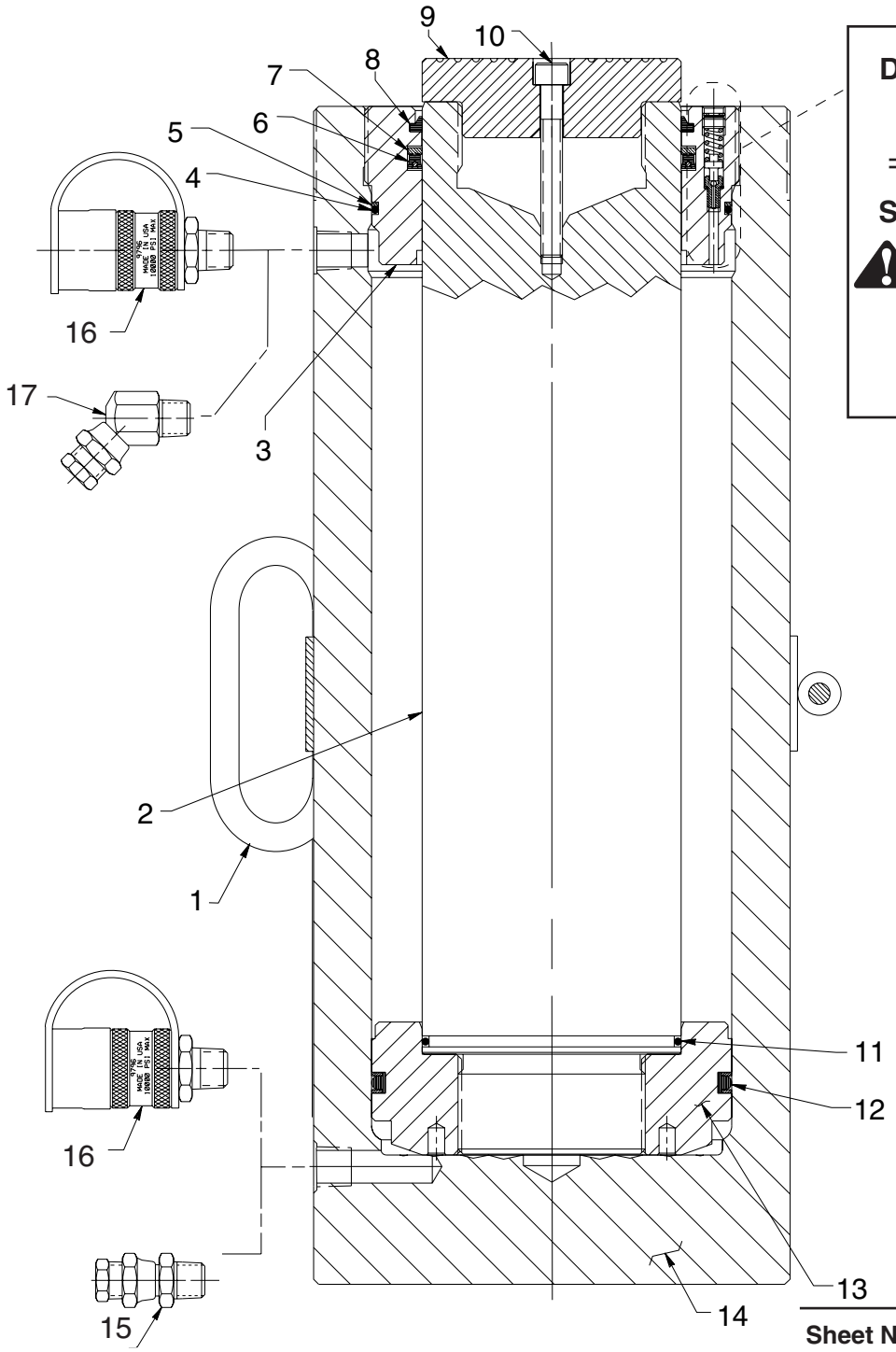

Double-acting Cylinder Relief Valve

See important DANGER statement on back of sheet 1 of 1

Sheet No.	**1 of 1**
Rev. 5	**Date: 30 Nov. 2000**

Litho in USA

DANGER: To help avoid possible serious personal injury or death,

- **In the event that the cylinder retract port is ever restricted or plugged, a double-acting cylinder relief valve will help prevent excessive pressure from building in the cylinder. DO NOT attempt to adjust or service this relief valve! If oil leakage is detected from this relief valve, discontinue use of the cylinder immediately and contact Power Team or OTC Technical Services. Only Power Team or OTC Authorized Hydraulic Service Centers should service this relief valve.**

Item No.	Part No.	No. Req'd	Description
1	**421939OR9**	1	Cylinder Lift Handle Assembly (For RD1506, RD1506-VLCEK, RD15013 & RD15013-VLCEK)
2	**51313**	1	Piston Rod (For RD1506 & RD1506-VLCEK)
	51314	1	Piston Rod (For 51684, RD15013 & RD15013-VLCEK)
3	**51312**	1	Retainer Nut (Torque to 90/110 ft. lbs.)
4	***13425**	1	O-ring (6-1/4 x 6" x 1/8)
5	***19298**	1	Backup Washer (6-1/4 x 6" x .048)
6	***19293**	1	U-cup
7	***19349**	1	Backup Washer (5" x 4-1/2 x .105)
8	***207497**	1	Rod Wiper
9	**38425**	1	Serrated Insert (For 51684, RD1506 & RD15013)
	350582	1	Load Cap (For RD1506-VLCEK & RD15013-VLCEK)
10	**17816**	1	Cap Screw (3/8-16 UNC X 3" Lg.; For 51684, RD1506 & RD15013)
11	***19295**	1	O-ring (2-1/2 x 2-1/4 x 1/8)
12	***19296**	1	Piston T-seal w/ Backup Rings
13	**51311**	1	Piston Head (Use Loctite No. 277 when assembling Piston Head to Piston Rod [Item #2]. Torque to 200 ft. lbs.)
14	**64455**	1	Cylinder Body (For RD1506 & RD1506-VLCEK)
	64448	1	Cylinder Body (For 51684, RD15013 & RD15013-VLCEK)
16	**9796**	2	Ram Half Coupler w/ Plastic Dust Cap (For RD1506, RD1506-VLCEK, RD15013 & RD15013-VLCEK)
15	**10469**	1	Fitting (For 51684)
17	**10648**	1	Fitting (For 51684)
	PARTS INCLUDED BUT NOT SHOWN		
	37782	1	Warning Decal
	350718	1	Trade Name Decal (For RD1506 & RD1506-VLCEK)
	350719	1	Trade Name Decal (For RD15013 & RD15013-VLCEK)
	421271	1	Thread Protector (For RD1506 & RD15013)

To Drawing

Part numbers marked with an asterisk (*) are contained in Repair Kit No. 300007.

Refer to any operating instructions included with this product for detailed information about operation, testing, disassembly, reassembly, and preventive maintenance.

Items found in this parts list have been carefully tested and selected. **Therefore: Use only genuine replacement parts!**

Additional questions can be directed to our Technical Services Department.

Note: Shaded areas reflect last revision(s) made to this form.