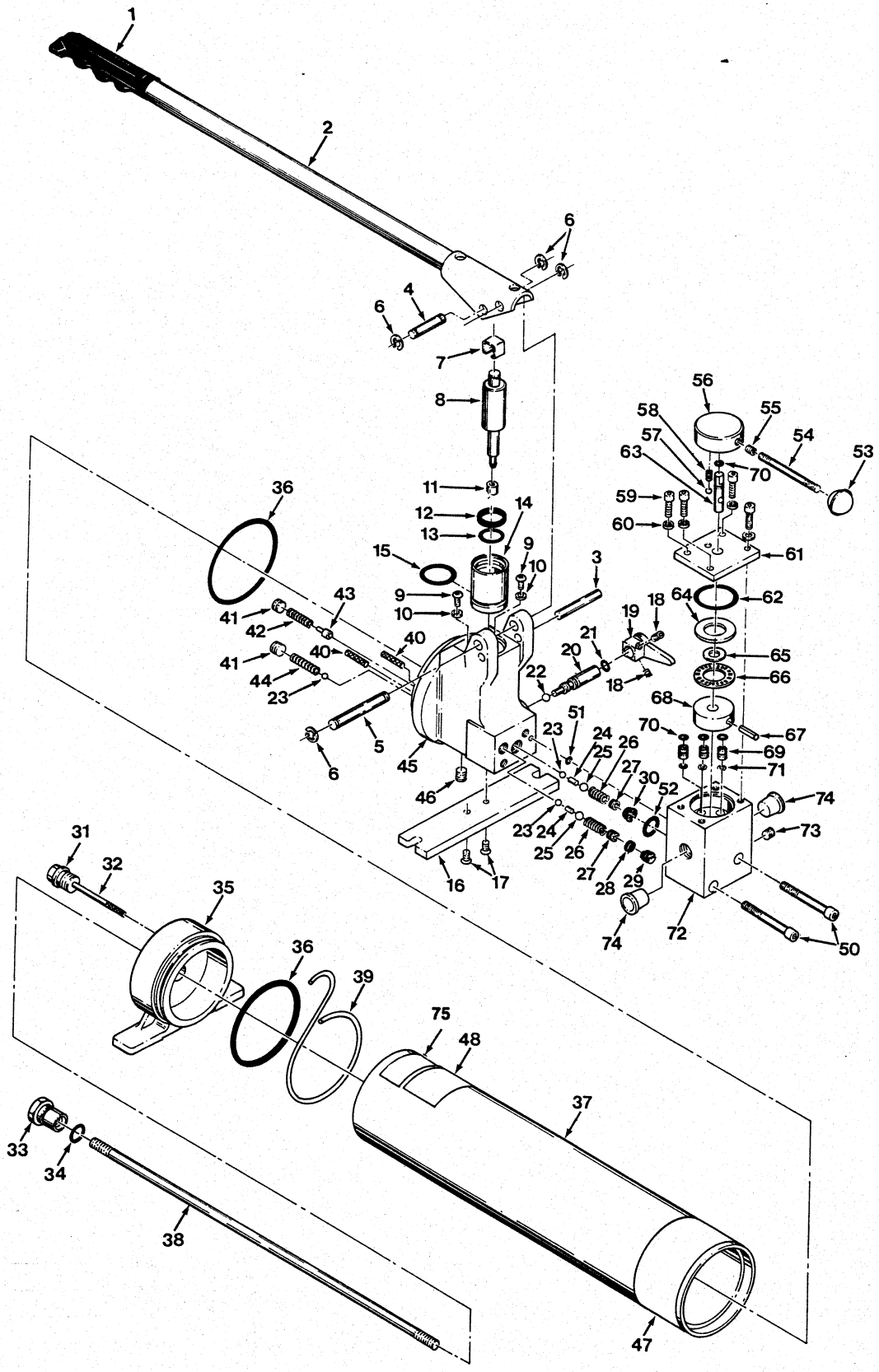

FIGURE 4-2. EXPLODED ILLUSTRATION OF HP-150-DV HAND PUMP

PARTS LIST MODEL HP-150-DV HAND PUMP

INDEX NO.	HP-150-DV PART NO.	QUANTITY REQUIRED	PART NAME
1	X-6429	1	Vinyl Grip
2	X-7138-1-A	1	Socket and Handle Assembly
3	S-1-41	1	Stop Pin
4	X-6414-1	1	Pivot Pin
5	X-6414-4	1	Pivot Pin
6	X-6415-1	4	Retaining Ring
7	X-6404	1	Pump Clip
8	X-7867	1	Plunger
9	H-2963	2	Button Head Cap Screw
10	H-4002-P	2	Washer
11	X-7011-3	1	"U" Cup
*12	X-6907-7	1	Wiper
*13	X-6477-2	1	Plunger "O" Ring
14	X-7866	1	Bronze Bushing
*15	X-6477-88	1	Bushing "O" Ring
16	X-7868	1	Mounting Strap
17	S-9-20	2	Flat Head Machine Screw
18	S-7-54	2	Set Screw
19	X-7871	1	Bleeder Lever
20	X-7872	1	Bleeder Stem
*21	X-6477-62	1	Bleeder "O" Ring
*22	X-7873	1	7/32" Diameter Ball Bleeder Stem
*23	N-382	3	1/4" Diameter Ball
*24	X-6677	2	Suction Spacer
*25	X-6028	2	11/32" Diameter Ball
*26	X-6069-1	2	Discharge Spring
27	X-6406	2	Discharge Spring Retainer Screw
*28	X-6841	1	Pump Valve Seal
29	X-6840	1	Pump Valve Plug
*30	X-6483	1	Oil Filter Screen
31	X-6412	1	Reservoir Plug
32	X-7065	1	Bayonet Gage
33	X-7060	1	Connecting Plug
*34	X-6477-46	1	Connecting Plug "O" Ring
35	X-7059	1	End Cap
*36	X-6477-53	2	Reservoir Tube "O" Ring
37	X-7058	1	Reservoir Tube

*These Parts Included in Repair Kit.

INDEX NO.	HP-150-DV PART NO.	QUANTITY REQUIRED	PART NAME
38	X-7061	1	Connecting Rod
39	X-7066-1	1	Operating Lever Latch
*40	221318	2	Intake Filter
41	H-2985	2	Adjusting Screw
42	X-7148	1	By Pass Spring (H.P.)
43	X-7147-A	1	Ball Centering Pin Assembly
44	X-6425	1	By Pass Spring (L.P.)
45	X-7865-1	1	Pump Body
46	X-7874	1	Pipe Plug
*47	X-6781	1	Decal — RAM-PAC
48	X-7811	1	Decal — Warning
49	X-7865-1-A	1	4-Way Valve (Consists of Index Numbers 50 through 74)
50	H-2223	2	Socket Head Cap Screw
*51	X-6477-1	1	"O" Ring, Return
*52	X-6477-64	1	"O" Ring, Pressure
53	X-6860	1	Control Handle Knob
54	X-6859	1	Control Handle
55	S-7-121	1	Set Screw
56	X-6858	1	Control Shaft Cap
57	N-382	1	Detent Ball, 1/4" Diameter
58	X-6868	1	Detent Spring
59	S-49-106	4	Socket Head Cap Screw
60	S-42-9	4	Lock Washer
61	X-6857	1	Valve Cover
*62	X-6477-40	1	"O" Ring, Cover
63	X-6861	1	Control Shaft
64	X-6863	1	Thrust Race
65	X-6864	1	Spacer Washer
66	X-6862	1	Needle Bearing
67	H-5233	1	Roll Pin
68	X-7492-A	1	Control Drum
69	X-6866	3	Valve Seat Spool
*70	X-6477-39	4	"O" Ring, Spool and Control Shaft.
*71	X-6867	6	Spring Washer
72	X-7870	1	Valve Body
73	S-25-13	1	Pipe Plug
74	X-6869	2	Cap Plug, Tapered
75	X-6416-48	1	Decal — Model No.
	X-7877		Repair Kit