SPX POWER TEAM

SPX Corporation
2121 West Bridge Street
Owatonna, MN 55060 USA
Phone: (507) 455-7100
Tech. Services: (800) 477-8326
Fax: (800) 765-8326
Order Entry: (800) 541-1418
Fax: (800) 288-7031

International Sales: (507) 455-7150
Fax: (507) 455-7122

Internet Address:
http://www.powerteam.com

Form No. 108131

Parts List for:

421937
RH203
RH203-PFAFF

MODEL D
SINGLE-ACTING, HOLLOW CENTER, SPRING RETURN
HYDRAULIC CYLINDER
Max. Capacity: 19.6 Tons At 10,000 PSI

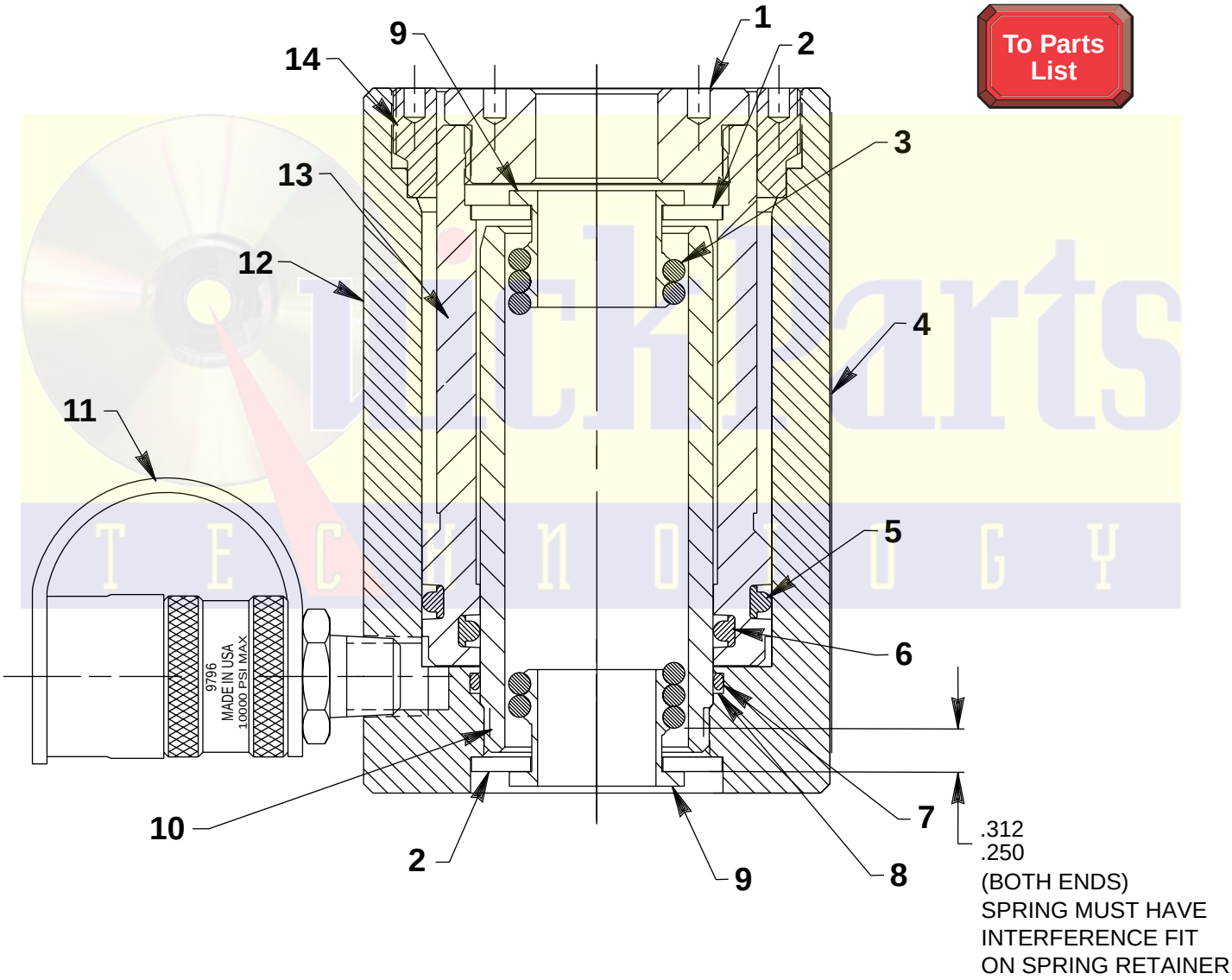

Sheet No.	**1 of 1**
Rev.	**Date: 6 April 2000**

Litho in USA

Item No.	Part No.	No. Req'd	Description
1	**28611**	1	Insert
2	**205122**	4	Upper Spring Lock
3	**14244**	1	Extension Spring
4	**360027**	1	Trade Name Decal (For RH203)
5	***14243**	1	T-seal & Backup Rings (Smooth side of Backup Ring must be against seal.)
	†19241	1	T-seal & Backup Rings (Smooth side of Backup Ring must be against seal.)
6	***14242**	1	T-seal & Backup Rings (Smooth side of Backup Ring must be against seal.)
	†19239	1	T-seal & Backup Rings (Smooth side of Backup Ring must be against seal.)
7	***11895**	1	O-ring (2.18 x 2.00 Nitrile)
	†19017	1	O-ring (2.18 x 2.00 Viton)
8	**205990**	1	Backup Washer (2.19 x 2.00)
9	**28608**	2	Spring Retainer
10	**360026**	1	Standpipe (Bottom out and back off [.01] revolution. Apply primer and Loctite 242.)
11	**9796**	1	Ram Half Coupler w/ Dust Cap (For RH203 & RH203-PFAFF)
	9796	2	Ram Half Coupler w/ Dust Cap } For 421937
	9771	1	Double Tee Adapter } For 421937
	9683	1	Male Connector } For 421937
12	**422021**	1	Cylinder Body
13	**34111**	1	Piston Rod
14	**28607**	1	Gland Nut (Torque to 60/80 ft. lbs.)
	PARTS INCLUDED BUT NOT SHOWN		
	†19526	1	O-ring (Visable coupler seal)
	†205724	1	Decal (Viton)
	252184	1	Trade Name Decal (For RH203-PFAFF)
	252017	1	Decal/Serial (For RH203-PFAFF)
	***203908**	1	Warning Decal
	203908-CE	1	Warning Decal (For RH203-PFAFF)

To Drawing

Part numbers marked with an asterisk (*) are contained in Repair Kit No. 300069.
Part numbers marked with a daggar (†) are contained in Viton Repair Kit No. 300222.

Refer to any operating instructions included with this product for detailed information about operation, testing, disassembly, reassembly, and preventive maintenance.

Items found in this parts list have been carefully tested and selected. **Therefore: Use only genuine Power Team replacement parts!**

Additional questions can be directed to our Technical Services Department.