SPX POWER TEAM

SPX Corporation
2121 West Bridge Street
Owatonna, MN 55060 USA
Phone: (507) 455-7100
Tech. Services: (800) 477-8326
Fax: (800) 765-8326
Order Entry: (800) 541-1418
Fax: (800) 288-7031

International Sales: (507) 455-7150
Fax: (507) 455-7122

Internet Address:
http://www.powerteam.com

Form No. 100315

Parts List for:

100293
100294

SINGLE-ACTING, SPRING RETURN
HYDRAULIC CYLINDERS

To Parts List

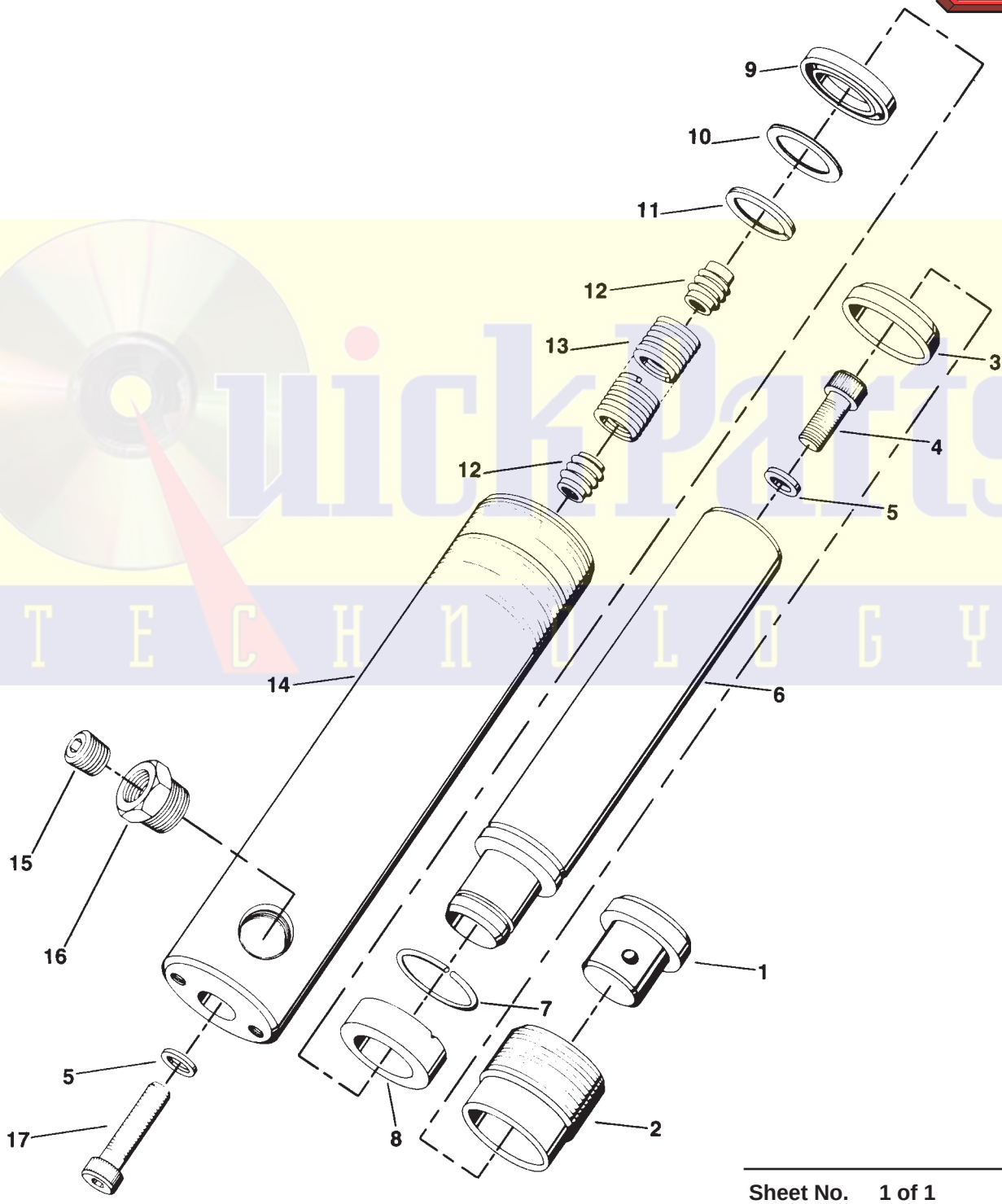

QuickParts TECHNOLOGY

Sheet No.	**1 of 1**
Rev.	**Date: 15 Sept. 1993**

Litho in USA

Item No.	Part No.	No. Req'd	Description
1	**201375**	1	Adapter (Grooved Saddle)
2	**201376**	1	Retainer Nut (Torque to 450/500 in. lbs.)
3	***201424**	1	Rod Wiper
4	**15122**	1	Soc. Hd. Cap Screw (10-32 UNF X 5/8; Torque to 50/60 in. lbs.)
5	***14319**	2	Copper Washer (3/16 X 5/16 X 1/32)
6	**36092**	1	Piston Rod (Model 100293)
	36093	1	Piston Rod (Model 100294)
7	**16072**	1	Round Retaining Ring
8	**201377**	1	Piston Head (Assemble with groove toward shoulder.)
9	***13426**	1	U-cup Piston Seal
10	**201373**	1	Retainer Washer
11	***13653**	1	Retainer Ring
12	**201372**	2	Spring Retainer
13	**201422**	1	Extension Spring (Model No. 100293)
	201423	1	Extension Spring (Model No. 100294) (Spring must not extend beyond threads of spring retainer [both ends]. Stretch, clean and lubricate before ass'y.)
14	**38785**	1	Cylinder Body (Model No. 100293)
	38786	1	Cylinder Body (Model No. 100294)
15	**10479**	1	Pipe Plug (1/4 NPTF)
16	**10676**	1	Pipe Bushing (3/8 to 1/4 NPTF)
17	**16071**	1	Soc. Hd. Cap Screw (10-32 UNF X 1" long; Torque to 50/60 in. lbs.)
	***14995**	1	Trade Name Decal (Not Shown)

Part numbers marked with an asterisk (*) are contained in Repair Kit No. 300035.

quickparts TECHNOLOGY

To Drawing

Refer to any operating instructions included with this product for detailed information about operation, testing, disassembly, reassembly, and preventive maintenance.

Items found in this parts list have been carefully tested and selected. **Therefore: Use only genuine replacement parts!**

Additional questions can be directed to our Technical Services Department.