SPX POWER TEAM® OTC®

*SPX Corporation*
*5885 11th Street*
*Rockford, IL 61109-3699 USA*

*Internet Address:*
*http://www.powerteam.com*
*Tech. Services: (800) 477-8326*
*Fax: (800) 765-8326*
*Order Entry: (800) 541-1418*
*Fax: (800) 288-7031*

*SPX Corporation*
*655 Eisenhower Drive*
*Owatonna, MN 55060-0995 USA*
*Phone: (507) 455-7000*
*Tech. Services: (800) 533-6127*
*Fax: (800) 955-8329*
*Order Entry: (507) 455-1480*
*Fax: (800) 283-8665*
*International Sales: (507) 455-7223*
*Fax: (507) 455-7746*

**Form No. 100455**

**Parts List for:**

| | | |
|---|---|---|
| **2D-2825** | **41602** | **TO100PA** |
| **4001** | **200439** | **Y21** |
| **40513** | **200440** | **Y21-1RT** |
| **40660** | **203402** | **Y21-1** |
| **40661** | **H58** | **Y21A** |
| **41166BR13** | **P58** | **Y21-CELETTE** |
| **41582** | **PT-8095-PHI** | |

## MODEL C
## SINGLE STAGE - 2 WAY VALVE
# HYDRAULIC HAND PUMP

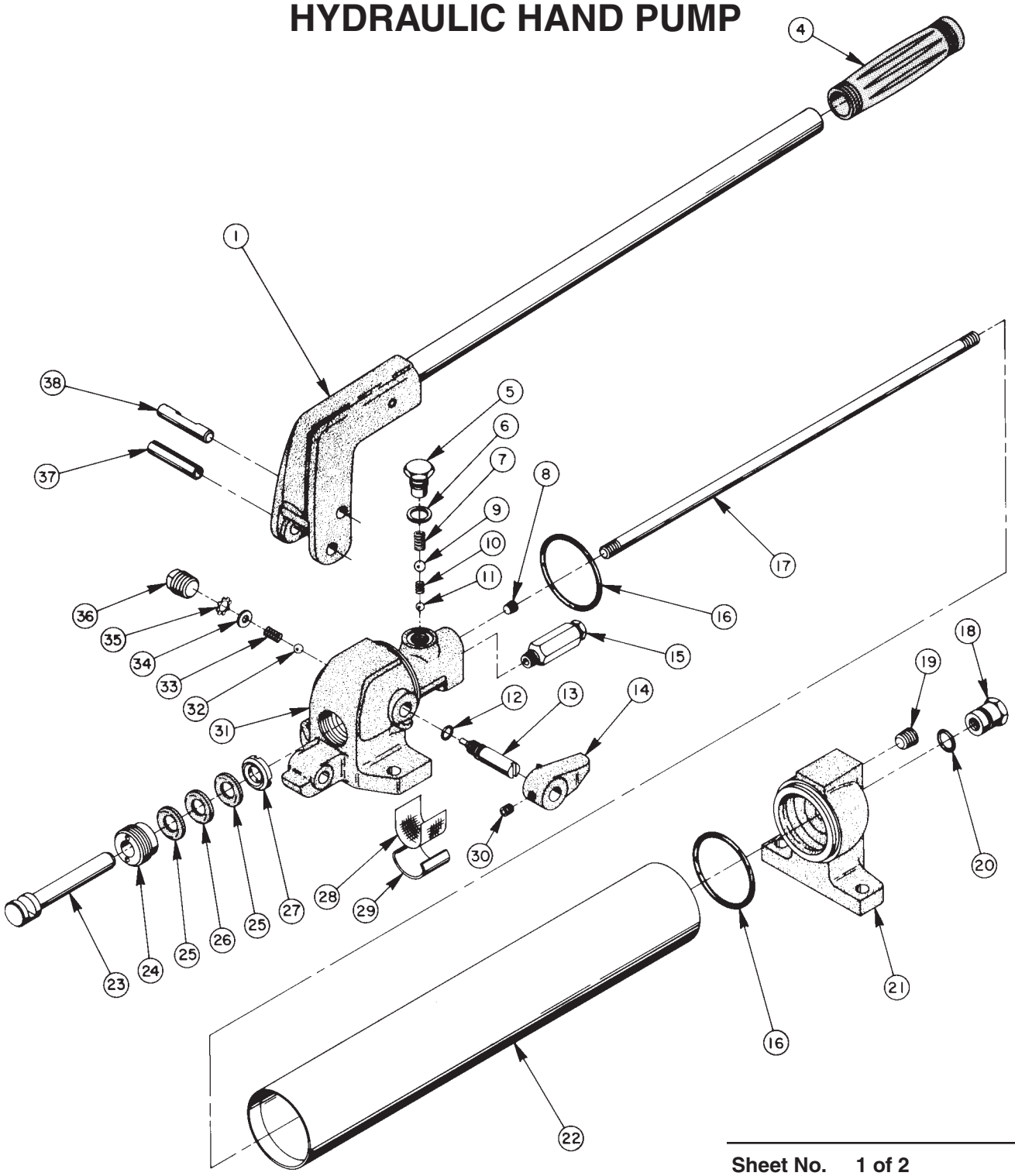


| | |
|---|---|
| **Sheet No.** | **1 of 2** |
| **Rev. 2** | **Date: 24 April 2003** |

© SPX Corporation

| Item No. | Part No. | No. Req'd | Description |
|---|---|---|---|
| 1 | **30743WH2** | 1 | Handle Ass'y (Consists of Handle, Pin, Handle Bracket & Grip) |
| | **30743YE5** | 1 | Handle Ass'y (Consists of Handle, Pin, Handle Bracket & Grip - For 41582) |
| | **30743TA2** | 1 | Handle Ass'y (Consists of Handle, Pin, Handle Bracket & Grip - For 2D-2825) |
| | **31541** | 1 | Handle Ass'y - Bent Upwards (Consists of Handle, Handle Bracket, Pin & Grip - For PT-8095-PHI) |
| 4 | **11610** | 1 | Handle Grip Only |
| | **10904** | 1 | Handle Grip Only (For TO100PA & PT-8095-PHI) |
| 5 | **21704** | 1 | Valve Screw (Torque to 35/42 ft. lbs.) |
| 6 | ***10901** | 1 | Brass Washer |
| 7 | ***11451** | 1 | Compression Spring (1/4 O.D. X 5/8 Lg.) |
| 8 | **11084** | 1 | Pipe Plug (1/16 NPTF) |
| 9 | ***10377** | 1 | Steel Ball (5/16 Dia.) |
| 10 | ***10841** | 1 | Compression Spring (13/64 O.D. X 1/4 Lg.) |
| 11 | ***10374** | 1 | Steel Ball (7/32 Dia.) |
| 12 | ***10267** | 1 | O-ring (7/16 X 5/16 X 1/16) |
| | **†18974** | 1 | O-ring (7/16 X 5/16 X 1/16) |
| 13 | **27596** | 1 | Release Valve Screw |
| 14 | **21643** | 1 | Release Valve Handle |
| 15 | **21278** | 1 | Relief Valve Ass'y - 10,000 PSI (Set at 10,100/10,700 PSI) |
| | **21278-6280** | 1 | Relief Valve Ass'y - 6280 PSI (For 40513) |
| | **21278-83** | 1 | Relief Valve Ass'y - 8300 PSI (For TO100PA & 200440) |
| | **21278-50** | 1 | Relief Valve Ass'y - 5000 PSI (For Y21-1RT & 40661) |
| | **21278-43** | 1 | Relief Valve Ass'y - 4300 PSI (For 200439) |
| 16 | ***10840** | 2 | O-ring (2-3/8 X 2-1/8 X 1/8) |
| | **†19039** | 1 | O-ring (2-3/8 x 2-1/8 X 1/8) |
| 17 | **21650** | 1 | Tie Rod (15-1/8 Lg.) |
| | **21651** | 1 | Tie Rod (9-1/8 Lg.; For 40513, 41602) |
| | **23449** | 1 | Tie Rod (31-1/4 Lg.; For PT-8095-PHI) |
| | **24127** | 1 | Tie Rod (5-1/4 Lg.; For Y21-1RT, 40661) |
| 18 | **21641** | 1 | Cap Nut |
| 19 | **14972** | 1 | Pipe Plug (1/4 NPTF) |
| 20 | ***10271** | 1 | O-ring (11/16 X 1/2 X 3/32) |
| | **†11445** | 1 | O-ring (11/16 X 1/2 X 3/32) |
| 21 | **30720WH2** | 1 | End Bell |
| | **23454** | 1 | End Bell (For PT-8095-PHI) |
| | **30720YE5** | 1 | End Bell (For 41582) |
| | **201406** | 1 | End Bell (For 2D2825) |
| 22 | **30741OR9** | 1 | Reservoir Tube (For P58) |
| | **30742OR9** | 1 | Reservoir Tube (For 40513) |
| | **31539** | 1 | Reservoir Tube (For PT-8095-PHI) |
| | **30741WH2** | 1 | Reservoir Tube (For TO100PA, 41582, 40660, 203402) |
| | **30742BL9** | 1 | Reservoir Tube (For 41602) |
| | **30741BL2** | 1 | Reservoir Tube (For Y21, Y21-1, Y21A, 200439, 200440, 4001) |
| | **24113BL2** | 1 | Reservoir Tube (For Y21-1RT) |
| | **30741RE7** | 1 | Reservoir Tube (For Y21-CELETTE) |
| | **24113WH2** | 1 | Reservoir Tube (For 40661) |
| | **30741BR13** | 1 | Reservoir Tube (For 41166BR13) |
| | **30741TA2** | 1 | Reservoir Tube (For 2D-2825) |
| | **30741RE10** | 1 | Reservoir Tube (For H58) |
| 23 | **21644** | 1 | Piston |
| 24 | **21647** | 1 | Piston Packing Nut |
| 25 | **†*10839** | 2 | "V" Packing |
| 26 | ***10542** | 1 | "V" Packing |
| | **†206461** | 1 | Packing |

**CONTINUED-**

| Item No. | Part No. | No. Req'd | Description |
|---|---|---|---|
| 27 | ***28857** | 1 | Packing |
| | **†206462** | 1 | Packing |
| 28 | ***11083** | 1 | Screen Filter |
| 29 | **21648** | 1 | Screen Retainer Clip |
| 30 | **10556** | 1 | Set Screw (1/4-20 UNC X 1/4 Lg.) |
| 31 | **41151WH2** | 1 | Pump Body |
| | **41151YE5** | 1 | Pump Body (For 41582) |
| | **41151TA2** | 1 | Pump Body (For 2D-2825) |
| 32 | ***10375** | 1 | Steel Ball (1/4 Dia.) |
| 33 | ***11024** | 1 | Compression Spring (1/4 O.D. X 5/8 Lg.) |
| 34 | ***11089** | 1 | Washer (#10 Bolt) |
| 35 | ***11088** | 1 | Retaining Ring |
| 36 | **11127** | 1 | Pipe Plug (3/8 NPTF) |
| 37 | **10415** | 1 | Roll Pin |
| 38 | **21645** | 1 | Wrist Pin |
| | **PARTS INCLUDED BUT NOT SHOWN** | | |
| | **202189** | 1 | Trade Name Decal (P58) |
| | **210491** | 1 | Trade Name Decal (H58) |
| | **11485** | 2 | Trade Name Decal (TO100PA) |
| | **14716** | 1 | Trade Name Decal (41602) |
| | **205382** | 1 | Trade Name Decal (40660) |
| | **201826** | 1 | Trade Name Decal (41166BR13) |
| | **13758** | 1 | Trade Name Decal (2D-2825) |
| | ***11094** | 1 | Instruction Decal |
| | **15612** | 1 | Instruction Decal (For 41602) |
| | **201829** | 1 | Instruction Decal (For 40660, 40661) |
| | **15934** | 2 | Self-Tapping Screw |
| | **27703** | 1 | Name Plate (41582, Y21-1, Y21A, Y21-RT, 200439) |
| | **200295** | 1 | Name Plate (40661) |
| | **205358** | 1 | Name Plate (40660, 203402) |
| | **209382** | 1 | Name Plate (For 4001, Y21, TO100PA, 200440, 41166BR13) |
| | **11554** | 1 | Speed Coupler (For TO100PA) |
| | **25599** | 1 | Hose Half Coupler (For Y21, Y21A, 4001) |
| | **11511** | 1 | Female Half Coupler (For 40602) |
| | **11967** | 1 | Tapered Cap Plug (For TO100PA) |
| | **10676** | 1 | Bushing (For 41602) |
| | **24815** | 1 | Tee Adapter (For Y21A) |
| | **10491** | 1 | Hyd. Gauge (For Y21A) |
| | **36886** | 1 | Hose Ass'y (For Y21, Y21A) |
| | **36887** | 1 | Hyd. Hose, 8 Ft (For TO100PA) |
| | **36892** | 1 | Hose Ass'y (For 41602) |
| | **†205724** | 1 | Decal (Viton) |

Parts marked with an asterisk (*) are contained in Standard Repair Kit No. 300255.
Part numbers marked with a daggar (†) are contained in Viton Seal Kit 300231.
NOTE: For 2D-2825 use Repair Kit No. 5P-8727.

Refer to any operating instructions included with this product for detailed information about operation, testing, disassembly, reassembly, and preventive maintenance.

Items found in this parts list have been carefully tested and selected. **Therefore: Use only genuine replacement parts!**

Additional questions can be directed to our Technical Services Department.