655 Eisenhower Drive
Owatonna, MN 55060
Phone: (507) 455-7000
Tech. Serv.: (800) 533-6127
Fax: (800) 955-8329
Order Entry: (800) 533-6127
Fax: (800) 283-8665
International Sales: (507) 455-7223
Fax: (507) 455-7746
Website:www.otctools.com

Form No. 104672

Parts List & Operating Instructions for:

7071
MEL-1144
TOOL 4000-E

Differential Housing Spreader

Use on Dana axle models 27, 30, 44, 53, 60, and 70 heavy-duty.

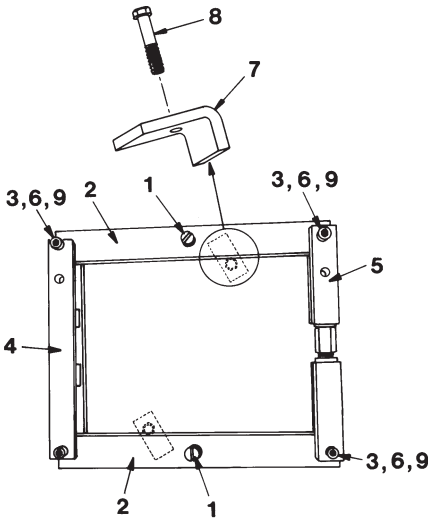

Parts List

Item No.	Part No.	No. Req'd	Description
1	**203006**	2	Bearing Pin
2	**37050**	2	Bolster (1" x 2" x 17")
3	**12560**	4	Soc. Hd. Cap Screw (1/2-13 x 2-1/2" Lg.)
4	**37047**	1	Leg Weldment
5	**37051**	1	Spreader Assembly
6	**12004**	4	Washers (17/32" I.D.)
7	**207683**	2	Bracket
8	**10057**	2	Hex Hd. Cap Screw
9	**10208**	4	Hex Nut (1/2-13 UNC)

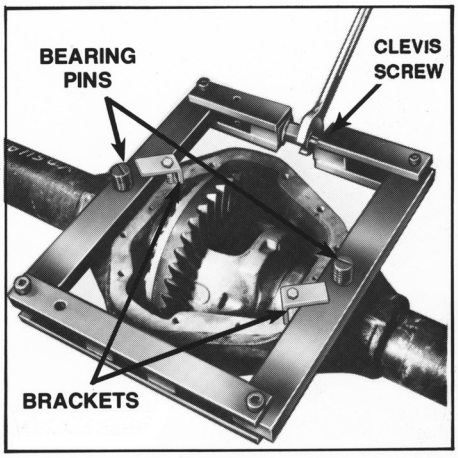

FIGURE 1

Operating Instructions

1. Assemble the tool as shown in the parts list illustration. Place the four 17/32" I.D. washers (Item #6) between the bolsters (#2) and the spreader assembly (#5).
2. See Figure 1. The bearing pins (#1) have a 7/8" dia. thread on one end and a 1" dia. thread on the other end. Place the spreader on the carrier housing, and determine which threaded end of the pin should be used.
3. Turn the clevis screw (located on the spreader assembly) to adjust the distance and alignment of the bearing pins with the correct holes in the carrier housing. When the pins are in position, thread them in until they bottom out in the holes in the carrier housing.
4. Lightly wrench tighten the four socket head cap screws (#3) located in the corners of the spreader.
5. Mount two brackets (#7) at an angle as shown.

WARNING: To prevent personal injury, the brackets (#7) must have maximum contact with the flat, parallel surfaces on the carrier housing and the bolsters. See Figure 1.

6. Position a dial indicator as shown in Figure 2. Spread the carrier housing by turning the clevis screw. **CAUTION: Do not spread the carrier housing beyond the manufacturer's specifications or damage can occur.**
7. Remove the dial indicator. Lift the differential assembly from the carrier.

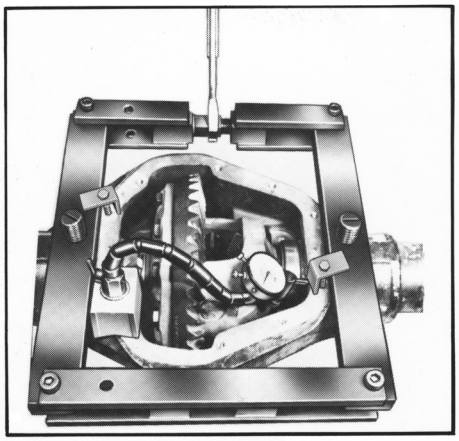

FIGURE 2

Sheet No. 1 of 1

Issue Date: Rev. B October 4, 2013

© Bosch Automotive Service Solutions LLC