POWER TEAM
A division of SPX Corporation
2121 West Bridge Street
Owatonna, MN 55060 USA
Phone: (507) 455-7100
Tech. Services: (800) 477-8326
Fax: (800) 765-8326
Order Entry: (800) 541-1418
Fax: (800) 288-7031

Form No. 101369

Parts List for:

P12-DEUTSCH

SINGLE STAGE
HYDRAULIC HAND PUMP
Max. Capacity: 10,000 PSI

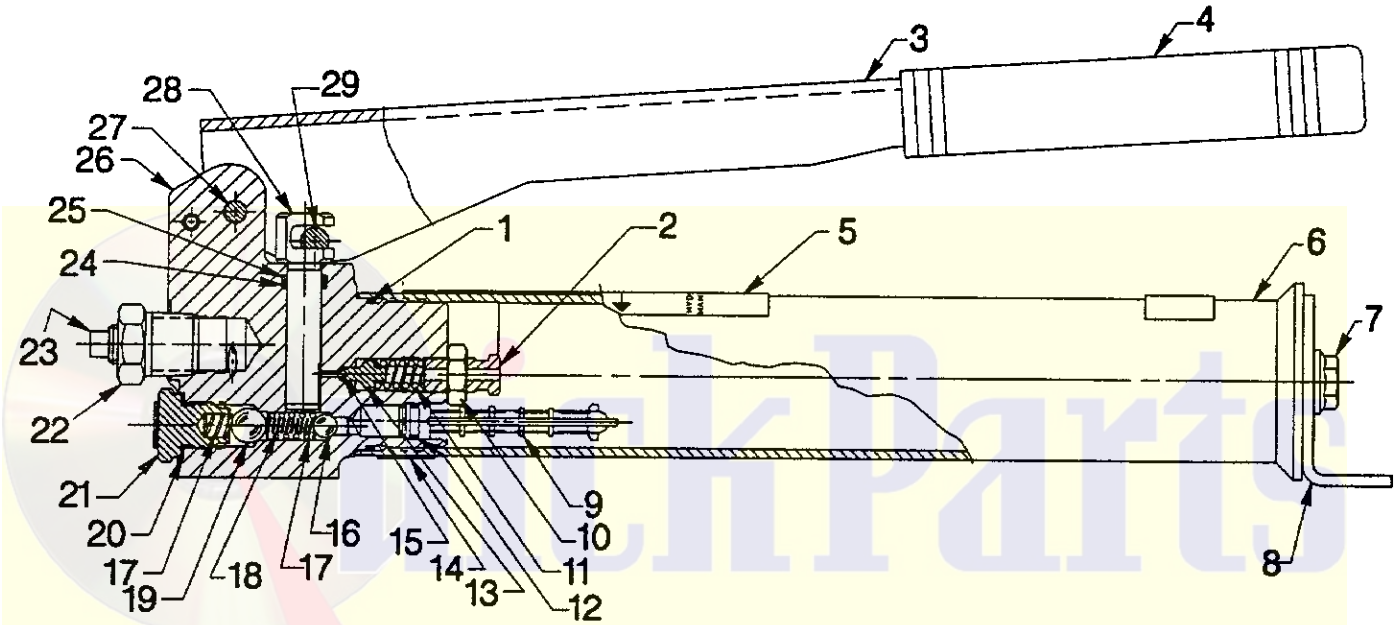

Item No.	Part No.	No. Req'd	Description
1	*14875	1	O-ring (1-5/8 X 1-1/2 X 1/16, -029)
2	29786	1	Valve Adjusting Screw
3	34918OR9	1	Handle Assembly
4	11610	1	Handle Grip
5	307329	1	Decal
6	34875	1	Reservoir Tube Assembly
7	15273	1	Cap Screw (5/16-18 UNC X 1/2 Lg.; Torque to 60/80 in. lbs.)
8	34876-1	1	Reservoir Leg
9	*215075	1	Filter
10	10386	1	Nut
11	*14475	1	Compression Spring (5/16 O.D. X 5/8 Lg.)
12	*12557	1	O-ring (11/32 X 7/32 X 1/16, -009)
13	29785	1	Ball Retainer
14	16116	1	Patent Decal
15	*14443	1	Steel Ball (3/32 Dia.)
16	*10375	1	Steel Ball (1/4 Dia.)

Item No.	Part No.	No. Req'd	Description
17	*10444	2	Compression Spring (3/16 I.D. X 13/32 Lg.)
18	*10445	1	Compression Spring (5/32 O.D. X 3/4 Lg.)
19	*10378	1	Steel Ball (3/8 Dia.)
20	*14874	1	Soft Copper Washer (.700 X 1/2 X 1/32)
21	305975	1	Valve Screw (Torque to 30/35 ft. lbs.)
22	12203	1	Straight Fitting
23	11048	1	Pressure Plug
24	*15279	1	O-ring (1/2 X 3/8 X 1/16, -012)
25	*250611	1	Backup Washer (1/2 x 3/8 x .049, -012)
26	50632	1	Pump Body
27	*15294	1	Clevis Pin
28	34877	1	Piston
29	29787	1	Wrist Pin

Part numbers marked with an asterisk (*) are contained in Repair Kit No. 300260.

Sheet No. 1 of 1

Issue Date: 2-15-94

Litho in USA

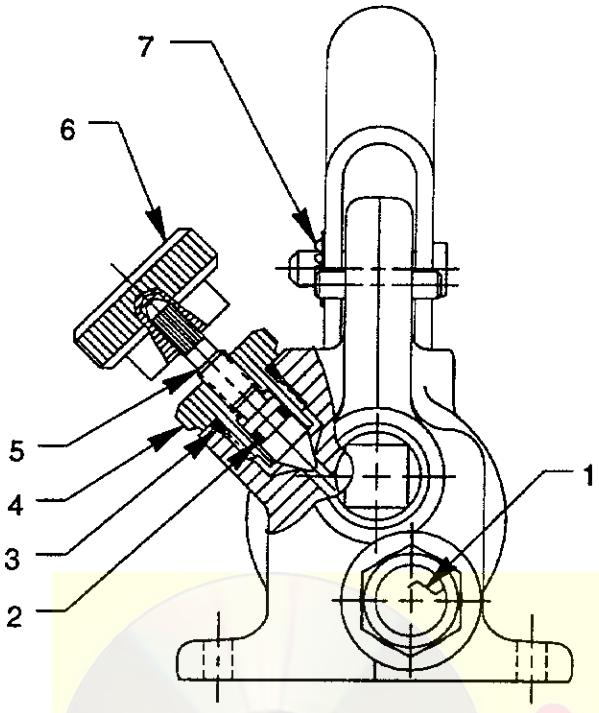

Item No.	Part No.	No. Req'd	Description
1	215907	1	Decal
2	*10265	1	O-ring (5/16 X 3/16 X 1/16, -008)
3	*10300	1	O-ring (5/8 X 15/32 X 5/64, -906)
4	34871	1	Guide
5	29783	1	Stem
6	29827	1	Knob
7	*15390	1	Speed Nut

Part numbers marked with an asterisk (*) are contained in Repair Kit No. 300260.

HYDRAULIC SCHEMATIC

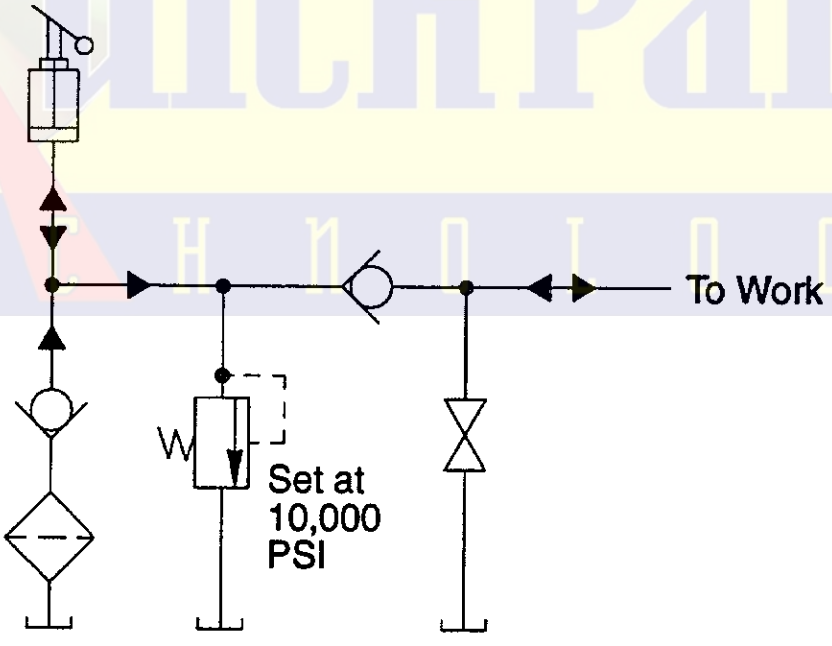

Refer to any operating instructions included with this product for detailed information about operation, testing, disassembly, reassembly, and preventive maintenance.

Items found in this parts list have been carefully tested and selected. **Therefore: Use only genuine Power Team replacement parts!**

Additional questions can be directed to our Technical Services Department.

QuickParts TECHNOLOGY