OTC
A division of SPX Corporation
655 Eisenhower Drive
Owatonna, MN 55060-1171 USA
Phone: (507) 455-7000
Tech. Services: (800) 533-6127
Fax: (800) 955-8329
Order Entry: (507) 455-1480
Fax: (800) 283-8665
International Sales: (507) 455-7223
Fax: (507) 455-7746

Form No. 101418

Parts List for:

1U-7537
4116

MODEL B
SINGLE-ACTING, SPRING RETURN
HYDRAULIC CYLINDER
Max. Capacity: 103.1 Tons at 10,000 PSI

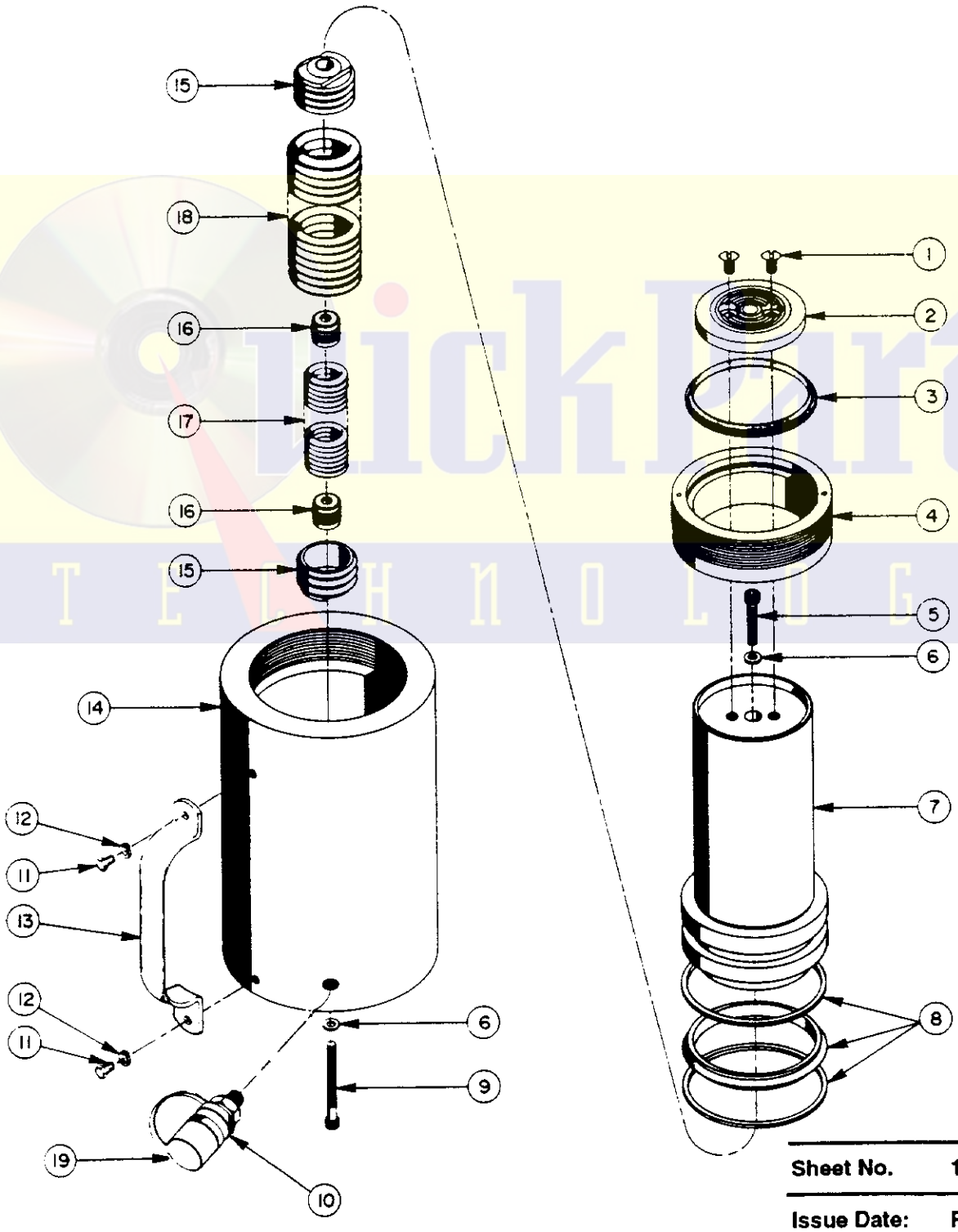

QuickParts TECHNOLOGY

Sheet No.	**1 of 1**
Issue Date:	**Rev. 5-15-95**

Litho in USA

Parts List, Form No. 101418, Back sheet 1 of 1

Item No.	Part No.	No. Req'd	Description
1	16112	2	Mach. Screw (3/8-16 UNC x 3/4 Lg.)
2	302651	1	Front Plate
3	*16113	1	Rod Wiper
4	44122	1	Retainer Nut (Torque to 90/100 ft. lbs. wet or dry)
5	11531	1	Cap Screw (3/8-16 UNC x 2" Lg.; Torque to 400/425 in. lbs.)
6	*12042	2	Copper Washer (9/16 x 3/8 x 1/32)
7	†52460	1	Piston Rod
8	*19207	1	T-Seal & Backup Rings (Smooth side of Backup Ring must be against seal.)
9	16110	1	Cap Screw (3/8-16 UNC x 3-1/2 Lg.; Torque to 400/425 in. lbs.)
10	25600-1	1	Ram Half Coupler (For 4116)
	1P-2375	1	Ram Half Coupler (For 1U-7537)
11	10005	2	Cap Screw (1/4-20 UNC x 1/2 Lg.)
12	10244	2	Lockwasher
13	35903	1	Handle (For 1U-7537)
	35903BK2	1	Handle (For 4116)
14	†52342	1	Cylinder Body
15	36084	2	Spring Retainer (See detail below)
16	201417	2	Spring Retainer (See detail below)
17	201475	1	Extension Spring (See diagram below)
18	201474	1	Extension Spring (See diagram below)
19	9866	1	Dust Cap (For 4116)

PARTS INCLUDED BUT NOT SHOWN

37782	1	Warning Decal
211609	1	Trade Name Decal (For 4116)
420690	1	Trade Name Decal (For 1U-7537)

Part numbers marked with an asterisk (*) are contained in Repair Kit No. 300444.

(†) If damage occurs to either the piston rod or cylinder body, both parts should be replaced.

SPRING & RETAINER ASSEMBLY

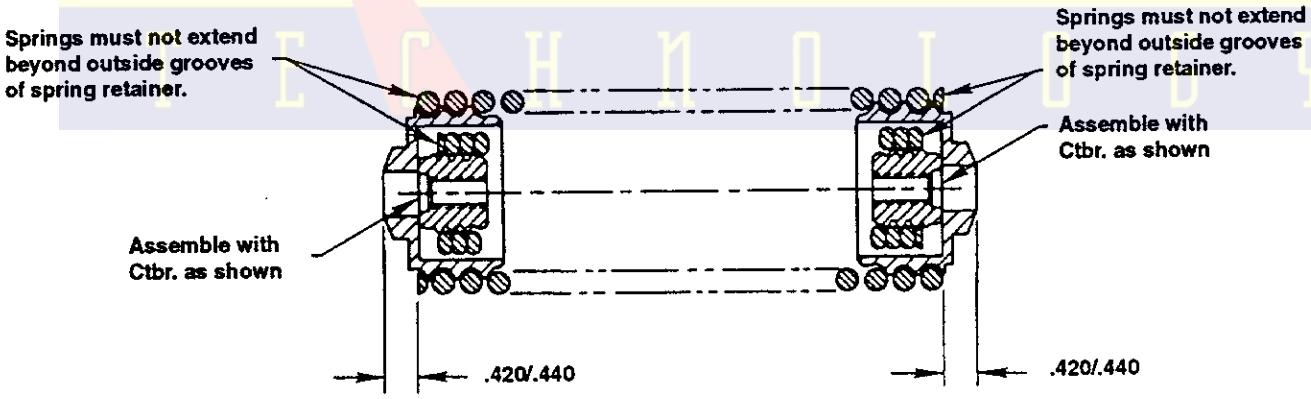

Refer to any operating instructions included with this product for detailed information about operation, testing, disassembly, reassembly, and preventive maintenance.

Items found in this parts list have been carefully tested and selected. **Therefore: Use only genuine OTC replacement parts!**

Additional questions can be directed to our Technical Services Department.

Note: Shaded areas reflect last revision(s) made to this form which were to remove all references to models 3RA1002S & 3RA1006S.

QuickParts TECHNOLOGY