655 Eisenhower Drive
Owatonna, MN 55060-0995 USA
Phone: (507) 455-7000
Tech. Serv.: (800) 533-6127
Fax: (800) 955-8329
Order Entry: (800) 533-6127
Fax: (800) 283-8665
International Sales: (507) 455-7223
Fax: (507) 455-7063

Form No. 540403

Parts List & Operating Instructions for: **5019A**

Low Lift Transmission Jack

Maximum Capacity: 2,200 Lbs.

Refer to any operating instructions included with the product for detailed information about operation, testing, disassembly, reassembly, and preventive maintenance.

Items found in this parts list have been carefully tested and selected by OTC. **Therefore: Use only OTC replacement parts!**

Additional questions can be directed to the OTC Tech. Serv. Dept. at (800) 533-6127.

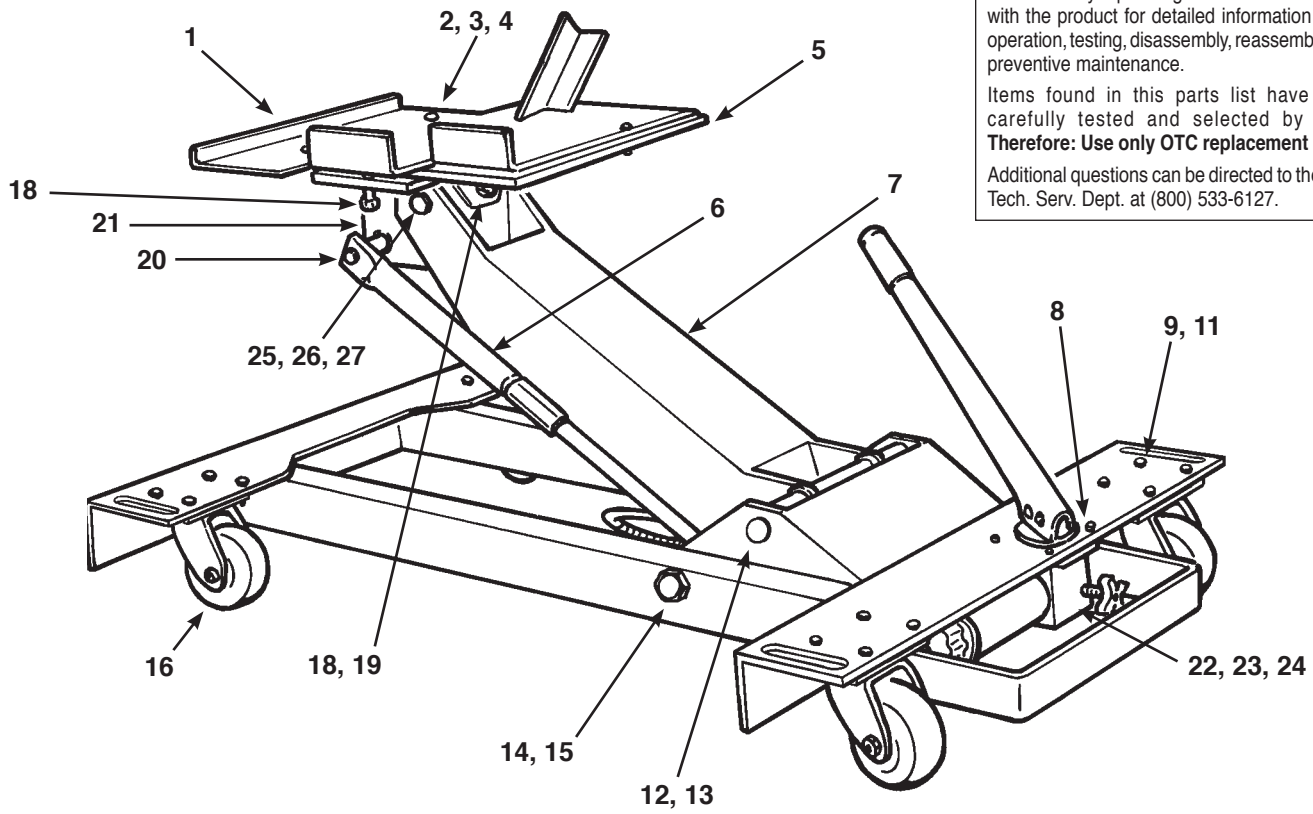

Item No.	No. Req'd	Description
		The following items are contained in Hardware Kit No. 549851
2	3	Hex Nut
3	3	Washer
4	3	Bolt *(M12 x 1.75 x 31MM)*
8	4	Socket Hd. Screw
9	16	Hex Nut *(5/16-18)*
11	16	Hex Hd. Cap Screw
12	2	Retaining Ring
14	2	Hex Hd. Cap Screw
15	2	Washer
18	4	Hex Hd. Cap Screw
19	2	Lock Nut *(.750-10)*
20	1	Retaining Ring
23	5	Cap Screw
24	1	Retainer
25	2	Hex Hd. Cap Screw
26	2	Hex Lock Nut
27	2	Flanged Bearing

Item No.	Part No.	No. Req'd	Description
1	**538316**	1	Trans. Mounting Plate *(for Rockwell & Eaton® RoadRanger® transmissions; includes Items 1-4)*
5	**538320**	1	Mounting Plate
6	**538311**	1	Special Screw
7	**538313**	1	Lift Weldment
13	**539019**	1	Pin
16	**541308**	4	Caster
21	**538328**	1	Mounting Bracket
22	**544346**	1	Swivel Hand Pump *(see Form No. 544717)*
			Parts Included but Not Shown
	218083	2	Warning Decal
	540402	1	Decal
	312556	1	Warning Decal

© 2007 Service Solutions U.S. LLC

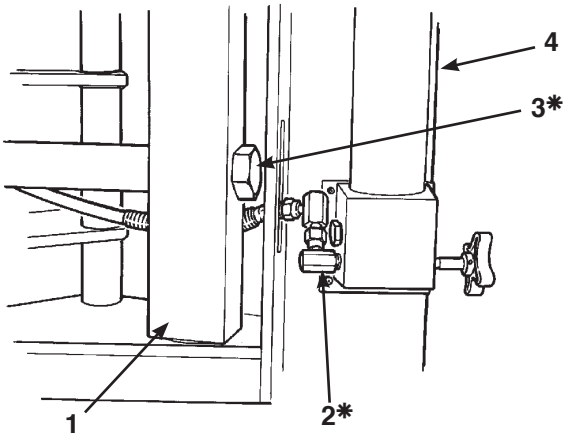

Item No.	Part No.	No. Req'd	Description
1	**538314**	1	Cylinder Mounting Plate
2	*	2	Elbow Fitting
3	*	1	Hex Screw *(1-8 x 82.3 MM)*
4	**544346**	1	Swivel Hand Pump *(see Form No. 544717)*

Items marked with an asterisk (*) are contained in Hardware Kit No. 549851

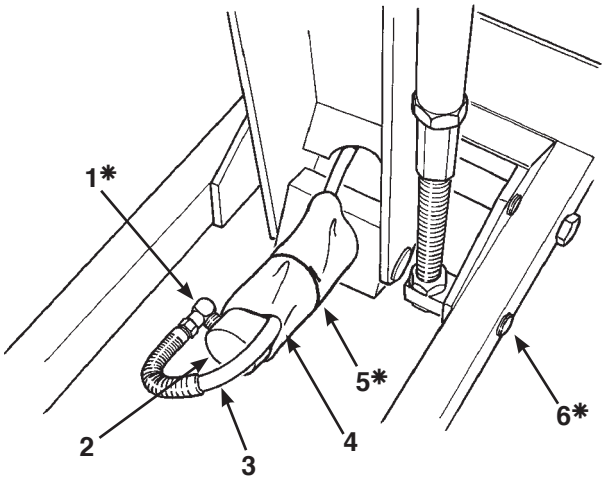

Item No.	Part No.	No. Req'd	Description
1	*	1	90° Elbow
2	**544331**	1	Hydraulic Cylinder *(see Form No. 544718)*
3	**544345**	1	Hydraulic Hose
4	**544332**	1	Protective Sleeve
5	*	1	Cable Tie
6	*	1	Retaining Ring

Safety Precautions

WARNING: Failure to follow these warnings could cause a loss of load, damage to equipment, and / or failure of equipment, which may result in personal injury or property damage:

- **If the operator cannot read English, operating instructions and safety precautions must be read and discussed in the operator's native language.**
- **Wear eye protection that meets the requirements of ANSI Z87.1 and OSHA standards.**
- **Before each use, inspect the jack for leaks and damaged, loose, or missing parts. Immediately replace cut, frayed, or damaged hoses.**

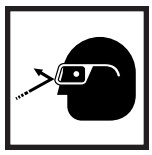

- **Do not modify this transmission jack or use attachments unless supplied by OTC. If a modification is needed, please contact OTC Technical Services.**
- **This jack is designed to remove or install only automotive or truck transmissions. Using the jack in a manner for which it is not designed may result in injury or damage to equipment.**

- **The load must not exceed the maximum rated capacity of 2,200 lbs.**
- **Stay out from underneath the load at all times.**
- **Secure the load to the jack.**
- **Use the jack on hard, level surfaces only.**
- **Lower the load completely before moving the jack.**

Assembly Instructions

1. Assemble the handle to the pump by aligning the holes in the handle with the holes in the pump cap and piston. Slide a pin through each hole, and secure each pin with a retaining ring on each end. See Figure 1.
2. For use with a Rockwell or Eaton® RoadRanger® truck transmission: Place the transmission mounting plate (No. 538316) on top of the white mounting plate (No. 538320) as shown in the parts list drawing. Insert bolts through the three holes in the plates. Secure the bolts by attaching a washer and nut to each bolt from underneath the plates.

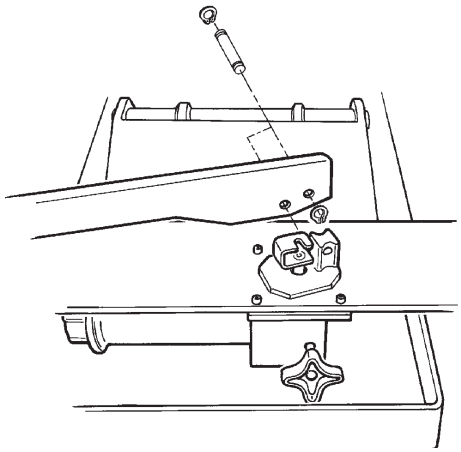

Figure 1

Operating Instructions

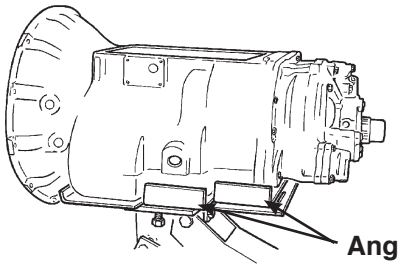

Figure 2
The transmission must rest against the angle plates as shown.

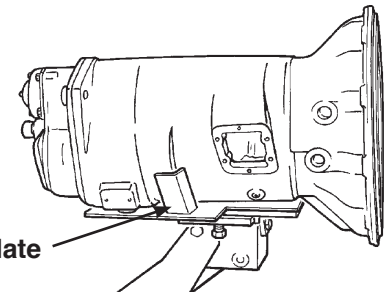

1. Position the jack under the transmission.
2. Close the control valve. Operate the pump handle to raise the boom and align the mounting plate with the transmission. See Figure 2.
3. Remove the transmission according to the instructions in the vehicle service manual.
4. Position the transmission on the mounting plate, resting against the angle plates as shown in Figure 2.
   - The transmission mounting plate may be tilted forward and backward by adjusting the linkage arm (No. 538311).
   - The transmission mounting plate may be tilted side-to-side by adjusting the hex hd. cap screws.
5. Secure the transmission to the mounting plate.
6. Lower the load by slowly opening the control valve. Use the control valve to regulate how fast the boom is lowered.

Optional Equipment - OTC AdjustaGrip® Universal Mounting Arm (No. 538578)

OTC's universal mounting arms may be used to mount other large transmissions to the low lift transmission jack. (Order No. 305811 for one universal mounting arm; order each arm separately.)

1. Remove the transmission mounting plate (No. 538316), bolts, washers, and hex nuts.
2. Fasten the universal mounting arms to the top of the mounting plate (No. 538320) using the washers and nuts provided. See Figure 3.
   a. Loosen all the joints in the adjust-a-grip arms.
   b. Locate the right angle mounting ear of each arm over a slot in the mounting plate, and install a washer and nut.
   c. Use cap screws to attach at least two of the arms to the transmission.

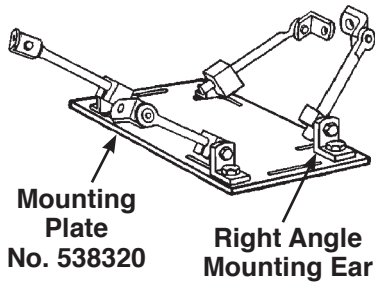

Figure 3

Maintenance

1. Completely lower the jack any time it is not being used.
2. The hydraulic pump and ram assembly should be drained, flushed, and refilled with oil at least once each year. Use a high grade hydraulic oil such as OTC No. 9636 or an equivalent (215 SUS viscosity rating at 100° F).
3. Lubricate caster swivel plates and wheels every six months using pressure gun grease.
4. Lubricate lift arm pivot points as needed with SAE 30 motor oil.