SPX Corporation
655 Eisenhower Drive
Owatonna, MN 55060-0995 USA
Phone: (507) 455-7000
Tech. Serv.: (800) 533-6127
Fax: (800) 955-8329
Order Entry: (800) 533-6127
Fax: (800) 283-8665
International Sales: (507) 455-7223
Fax: (507) 455-7063

Form No. 102610

Parts List & Operating Instructions for: 1875

Automatic Air / Hydraulic

Oil Filter Crusher

Max. Capacity: 25 Tons

For pump assembly information, refer to the parts list for pump No. 58139.

For cylinder assembly information,

- If the cylinder has external "collar" threads, refer to repair kit No. 300147 and the parts list for cylinder No. 58149.
- If the cylinder does not have external "collar" threads, refer to repair kit No. 300618 and the parts list for cylinder No. 218772-BL2.

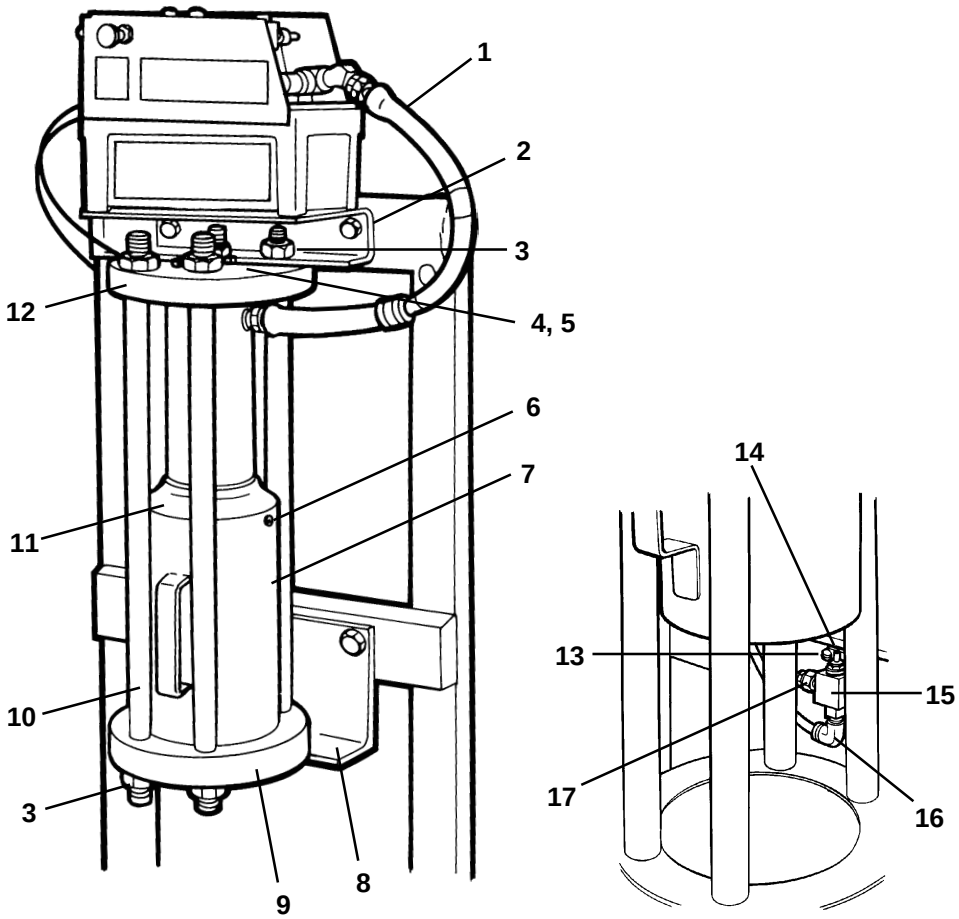

Item No.	Part No.	No. Req'd	Description
1	**306519**	1	Hydraulic Hose
2	**48513-BL2**	1	Upper Mounting Bracket
3	**217800**	8	Locknut *(3/4-16; torque to 300/320 ft. lbs.)*
4	**10085**	2	Cap Screw *(1/2-13 x 1-3/4")*
5	**10249**	2	Lockwasher *(for 1/2" bolt)*
6	**16342**	2	Flat Hd. Tapping Screw
7	**48668-BL2**	1	Shield
8	**48512-BL2**	1	Lower Mounting Bracket
9	**310761-BL2**	1	Bottom Plate
10	**310759**	4	Rod
11	**311106**	1	Plastic Shield
12	**310760-BL2**	1	Top Plate
13	**15467**	2	Rd. Hd. Phillips Screw *(10-24)*

Item No.	Part No.	No. Req'd	Description
14	**217732**	1	Mounting Bracket
15	**311026**	1	Control Valve
16	**15045**	1	90° Elbow Fitting
17	**15042**	1	Straight Fitting
	Parts Included but Not Shown		
	216703	1	Made in USA Decal
	311050	1	Caution Decal
	218390	1	Thread Adapter
	210195	1	Barbed Hose Fitting
	219001	1	Retaining Compound

Sheet No. 1 of 2

Issue Date: Rev. 12-22-97

© SPX Corporation

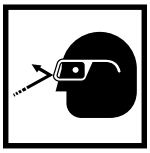

Safety Precautions

CAUTION: To prevent personal injury,

- **Read and follow the operating instructions supplied with the pump and frame.**
- **Wear protective eyewear that meets ANSI Z87.1 and OSHA standards.**
- **Center the oil filter over the drain hole in the counterbore. The filter's open end (sealing side) must be facing down toward the drain hole.**
- **Do not open the shield until the cycle is complete and the pump shuts off. Do not remove or modify the shield.**
- **Regularly inspect hoses for signs of wear or stress. If a hydraulic hose ruptures, immediately shut OFF the pump.**
- **Keep tie rod nuts torqued at 300-320 ft. lbs.**
- **Keep override switch in working order.**
- **Remove crushed filter carefully. Sharp edges can scratch, cut, or puncture skin.**

Assembly

1. Slide the plastic shield over the threads on the ram as shown in Figure 1.
2. Insert the ram through the rods, and thread two 1/2" cap screws and lockwashers through the top plate into the ram.
3. Align the two small holes in the plastic shield with the two holes in the ram shield. Thread two self-tapping screws through the ram shield into the plastic shield.
4. Clean the threads on the adapter and on the cylinder. Apply retaining compound No. 219001 (Loctite 277, Loctite 680, or Hernon Adhesive 846) to the adapter threads. Assemble the thread adapter into the ram until the adapter's shoulder bottoms out against the ram.
5. Place the pump on the upper mounting bracket. Thread four self-tapping screws through the platform into the pump.
6. Apply pipe sealant or one layer of teflon tape to the threads on each end of the hydraulic hose. **Note: Carefully apply only one layer of teflon tape, leaving the first thread exposed.** Any loose pieces of tape could be pinched and broken off inside the pipe end, causing the tape to travel through the system and possibly obstruct the flow of oil.

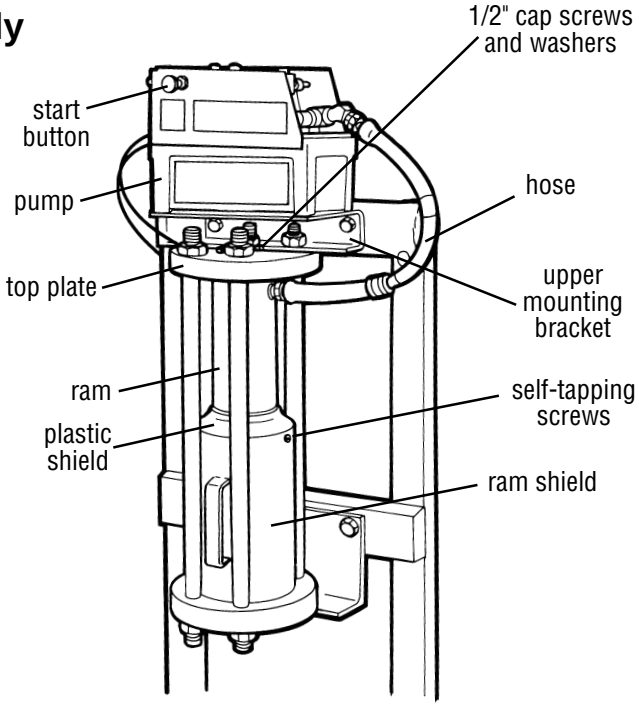

Figure 1

7. Remove the plastic plugs from the ram and pump. Attach the hose to the ram and then to the pump.
8. Insert the marked air hose (inlet) into the 90° fitting on the bottom of the control valve as shown in Figure 2. Tighten the nut to crimp the hose to the fitting. Insert the other air hose into the straight fitting on the side of the control valve, and tighten the nut. Attach tie straps to air hoses as shown in Figure 3.
9. Thread the 3/4" barbed pipe fitting into the bottom plate.

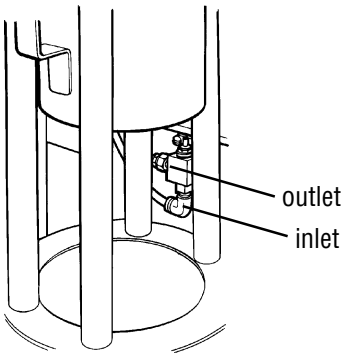

Figure 2

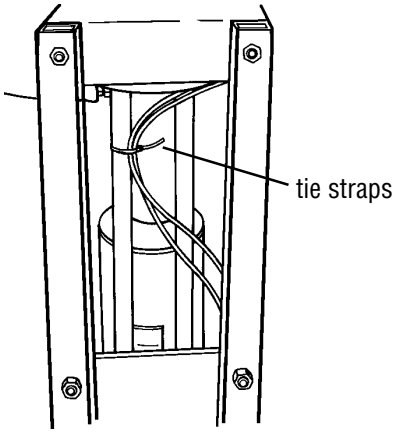

Figure 3

Operating Instructions

1. Place an approved waste oil container under the oil filter crusher's drain hole.
2. Connect the pump to shop air regulated at 100 PSI maximum.
3. Lift the ram shield, and center the oil filter over the drain hole in the counterbore. The filter's open end (the sealing area containing the o-ring) must be facing down toward the drain hole as shown in Figure 4. When the oil filter is crushed, the oil will be forced into the hole.
4. Close the ram shield, and press the START button on the pump. The pump will build pressure and then automatically shut off and release pressure. Do not open the shield until the cycle is complete and the pump shuts off. **If it is necessary to interrupt the cycle, pull the START button out. The pump will stop and the ram will retract.**
5. Open the ram shield and remove the crushed filter, being careful not to scratch, cut, or puncture your skin on the filter's sharp edges. See Figure 5.
6. Recycle or dispose of waste oil and oil filters according to local, state, and federal regulations.

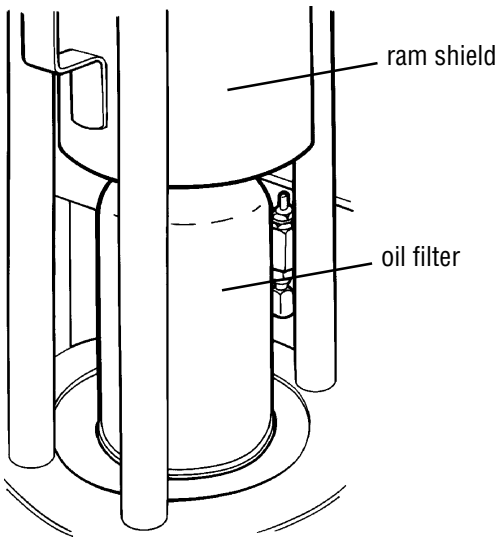

Figure 4

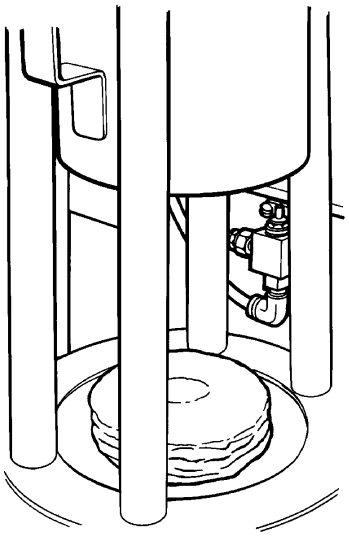

Figure 5

Maintenance

1. Maintain the oil level in the pump reservoir according to operating instructions included with the pump.
2. Regularly inspect hoses for signs of wear or stress, and replace as needed.
3. Keep the eight tie rod nuts torqued at 300-320 ft. lbs.
4. Keep the override switch in working order.

Refer to any operating instructions included with the product for detailed information about operation, testing, disassembly, reassembly, and preventive maintenance.

Items found in this parts list have been carefully tested and selected by OTC. **Therefore: Use only OTC replacement parts!**

Additional questions can be directed to our Tech. Services Dept. at 1-800-533-6127.

© SPX Corporation