SPX POWER TEAM® OTC®

SPX Corporation
5885 11th Street
Rockford, IL 61109-3699 USA

Internet Address:
http://www.powerteam.com
Tech. Services: (800) 477-8326
Fax: (800) 765-8326
Order Entry: (800) 541-1418
Fax: (800) 288-7031

SPX Corporation
655 Eisenhower Drive
Owatonna, MN 55060-0995 USA
Phone: (507) 455-7000
Tech. Services: (800) 533-6127
Fax: (800) 955-8329
Order Entry: (507) 455-1480
Fax: (800) 283-8665
International Sales: (507) 455-7223
Fax: (507) 455-7746

Form No. 100546

Parts List for:

1845	SPE5513	SPE5513DS-220
1846	SPE5513-220	SPE5513R
1847	SPE5513CE	SPE5513S
SPA556	SPE5513D	SPE5513SCE
SPA556CE	SPE5513D-220	SPE5513S-220
SPE556	SPE5513DCE	SPM556
SPE556-220	SPE5513DS	SPM556CE
SPE556CE	SPE5513DSCE	SPM5513
		SPM5513CE

HYDRAULIC SHOP PRESS

MAX. CAPACITY: 55 TONS

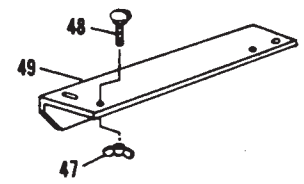

MOUNTING BRACKET
for P159 & 4016 HAND PUMP

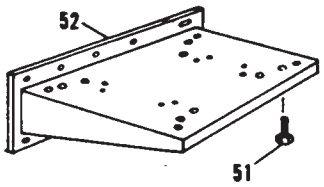

MOUNTING BRACKET
for all ELECTRIC PUMPS
and P460 HAND PUMP

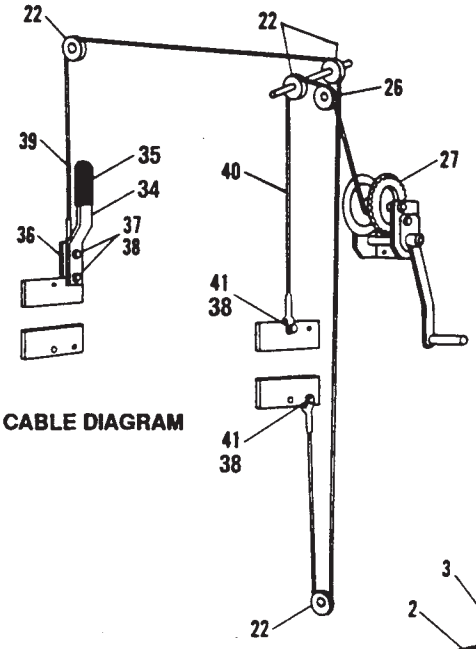

CABLE DIAGRAM

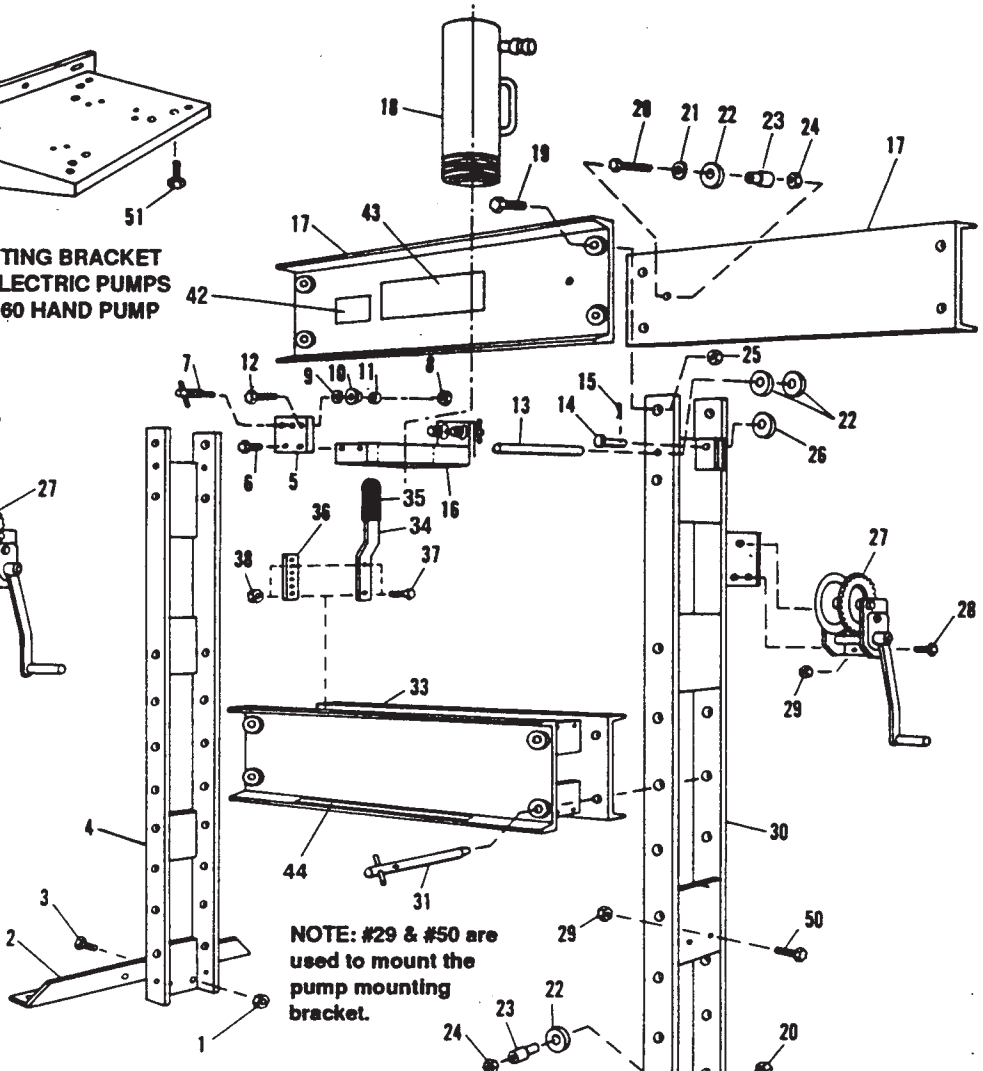

NOTE for SPE5513DS, SPE5513DS-220, & SPE5513DSCE only: An extension plate (#53) is needed to lower pump mounting bracket so winch handle does not hit on top of pump.

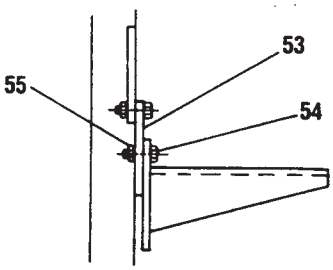

PRESS FRAME ONLY	USED ON
60361	1845, 1846, 1847
SPF55	SPA556, SPA556CE, SPE556, SPE556-220, SPE556CE, SPM556, SPE5513, SPE5513-220, SPE5513R, SPE5513S, SPE5513S-220, SPE5513DS, SPE5513DS-220, SPE5513DSCE, SPM5513, SPE5513CE, SPE5513D, SPE5513D-220, SPE5513DCE, SPM556CE, SPM5513CE, SPE5513SCE

Note: Shaded areas reflect last revision(s) made to this form.

© SPX Corporation

Parts List, Form No. 100546, Back sheet 1 of 3

Item No.	Part No.	No. Req'd	Description
1	**10216**	4	Hex Nut (3/4-10 UNC)
2	**25849**	2	Foot Angle
3	**10119**	4	Hex Hd. Cap Screw (3/4-10 UNC x 1-3/4 Lg.)
4	**42471**	1	L. H. Upright
5	**202496**	2	Plate
6	**10079**	4	Hex Hd. Cap Screw (1/2-13 UNC x 1" Lg.)
7	**25825**	2	Adjusting Screw
8	**10208**	4	Hex Nut (1/2-13 UNC)
9	**12004**	AR	SAE Washer (1/2" bolt)
10	**202498**	4	Roller
11	**202497**	4	Bushing
12	**12896**	4	Hex. Hd. Cap Screw (1/2-13 UNC x 2-1/4 Lg.)
13	**202490**	1	Pulley Axle
14	**16654**	1	Clevis Pin (3/4 dia. x 2" Lg.)
15	**10472**	1	Cotter Pin
16	**50954**	1	Ram Mounting Plate
17	**33328OR9**	2	Upper Bolster (Power Team)
	33328BL2	2	Upper Bolster (OTC)
18	**52380**	1	Single-acting Cylinder (All except SPE5513DS, SPE5513DS-220, SPE5513DSCE, SPE5513D, SPE5513D-220, & SPE5513DCE; See Form #101411)
	51682	1	Double-acting Cylinder (For SPE5513DS, SPE5513DS-220, SPE5513DSCE, SPE5513D, SPE5513D-220, & SPE5513DCE; See Form #101409)
19	**12697**	8	Hex Hd. Cap Screw (1"-8 x 3" Lg.)
20	**10089**	2	Hex Hd. Cap Screw (1/2-13 x 2-1/2 Lg.)
21	**12004**	1	SAE Washer (1/2" bolt)
22	**16659**	4	Pulley (3" dia.)
23	**202468**	2	Spacer
24	**15013**	2	Locknut (1/2-13 UNC)
25	**10221**	8	Hex Nut (1"-8 UNC)
26	**16653**	1	Pulley (2-1/2 dia.)
27	**18895**	1	Winch
28	**10049**	3	Hex. Hd. Cap Screw (3/8-16 UNC x 1" Lg.)
29	**10204**	5	Hex Nut (3/8-16 UNC; NOTE: Two for mounting plate;Three for winch.)
30	**42470**	1	R. H. Upright
31	**25846**	4	Pin Assembly
33	**51536OR9**	1	Lower Bolster (Power Team)
	51536BL2	1	Lower Bolster (OTC)
34	**38579**	1	Handle
35	**17241**	1	Handle Grip
36	**201929**	1	Cable Adjuster Strap
37	**10017**	2	Hex Hd. Cap Screw (1/4-20 UNC x 1" Lg.)
38	**12809**	4	Locknut (1/4-20 UNC)
39	**202483**	1	Press Cable
40	**204728**	1	Winch Cable
41	**10019**	2	Hex Hd. Cap Screw (1/4-20 UNC x 1-1/4 Lg.)
42	**206043**	1	Instruction Decal
43	**36585**	1	Trade Name Decal (Power Team)
	304984	1	Trade Name Decal (For 1845. 1846, & 1847)
44	**46896**	1	Warning Decal
47	**12029**	3	Wing Nut (For mounting P159 or 4016 hand pump.)
48	**12680**	3	Thumb Screw (For mounting P159 or 4016 hand pump.)
49	**42733WH2**	1	Pump Mounting Bracket (For mounting P159 or 4016 hand pump.)
50	**10052**	2	Hex Hd. Cap Screw (3/8-16 UNC x 1-1/4 Lg.)
51	**10798**	4	Hex Hd. Cap Screw (1//2-20 UNF x 3/4 Lg.; For mounting pump on SPE5513DS, SPE5513DS-220, & SPE5513DSCE)
	10048	4	Hex Hd. Cap Screw (3/8-16 x 7/8 Lg.; For mounting pump on SPM5513, SPE5513S, & SPE5513S-220)
52	**50931**	1	Pump Mounting Bracket (For mounting all electric pumps & P460 hand pump.)
53	**44733**	1	Extension Plate (For SPE5513DS, SPE5513DS-220, & SPE5513DSCE)
54	**10052**	2	Hex Hd. Cap Screw (3/8-16 x 1-1/4 Lg.;For SPE5513DS, SPE5513DS-220, & SPE5513DSCE)
55	**10204**	2	Hex Nut (3/8-16 UNC; For SPE5513DS, SPE5513DS-220, & SPE5513DSCE)

PARTS INCLUDED BUT NOT SHOWN

	350989	1	CE Decal (For SPA556CE, SPM556CE, SPE5513DSCE, SPE5513CE, SPM5513CE, & SPM556CE)

AR = As Required

NOTE: Pump mounting hardware for SPE556, SPE556-220, SPE556CE, SPE5513, SPE5513-220, SPE5513CE, SPE5513D, SPE5513D-220, SPE5513DCE, & 1845 is included with the pump.

Refer to any operating instructions included with this product for detailed information about operation, testing, disassembly, reassembly, and preventive maintenance.

Items found in this parts list have been carefully tested and selected. **Therefore: Use only genuine replacement parts!**

Additional questions can be directed to our Technical Services Department.

Note: Shaded areas reflect last revision(s) made to this form.

ELECTRIC PUMP

(used on SPE556, SPE556CE, SPE556-220, SPE5513, SPE5513-220, SPE5513CE, SPE5513D, SPE5513D-220, SPE5513DCE, & 1845)

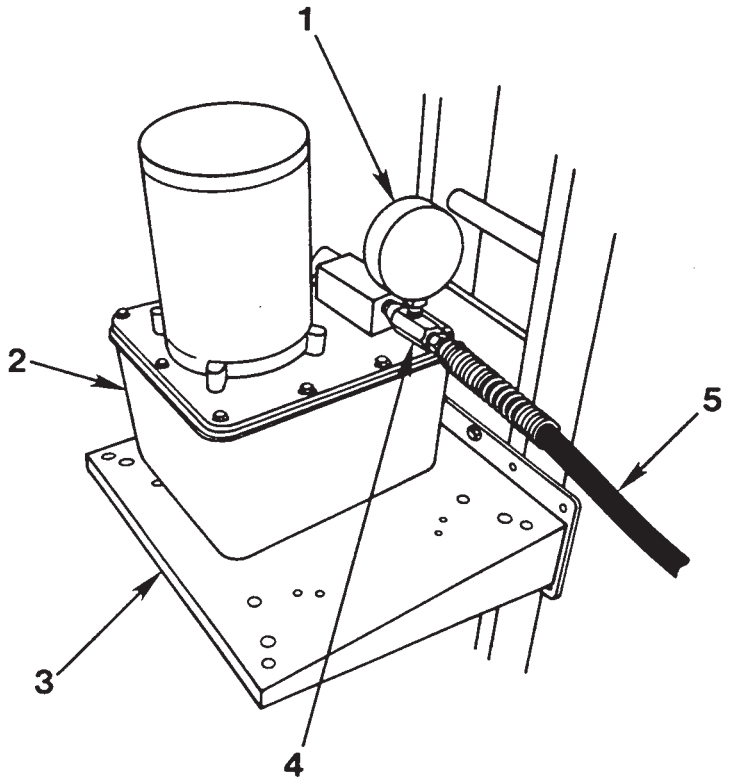

Item No.	Part No.	No. Req'd	Description
1	**9069**	1	Gauge
2	**4044**	1	Electric Pump (For 1845; See Form No. 100577)
	PE172	1	Electric Pump (For SPE556 & SPE5513; See Form No. 100577)
	PE172-50-220	1	Electric Pump (For SPE556-220 & SPE5513-220; See Form No. 100585)
	PE172-E220	1	Electric Pump (For SPE5513CE, & SPE556CE; See FormNo. 108083)
	PE174	1	Electric Pump (For SPE5513D; See Form No. 100577)
	PE174-50-220	1	Electric Pump (For SPE5513D-220 See Form No. 100585)
	PE174-E220	1	Electric Pump (For SPE5513DCE; See FormNo. 108083)
3	**50931**	1	Pump Mounting Bracket
4	**9670**	1	Tee Adapter
5	**350158**	1	Hydraulic Hose (For SPE556,1845, SPE556-220, SPE5513, & SPE5513-220)
	36887	2	Hydraulic Hose (For SPE5513D & SPE5513D-220)
	9769E	1	Hydraulic Hose (For SPE556CE, SPE5513CE, & SPE5513DCE)
	PARTS INCLUDED BUT NOT SHOWN		
	350989	1	CE Decal (For SPE556CE, SPE5513CE, SPE5513DCE, SPE5513SCE, & SPE5513DSCE)

NOTE: Pump mounting hardware is included with the pump for these presses.

P460 HAND PUMP

(used on SPM5513 & SPM5513CE)

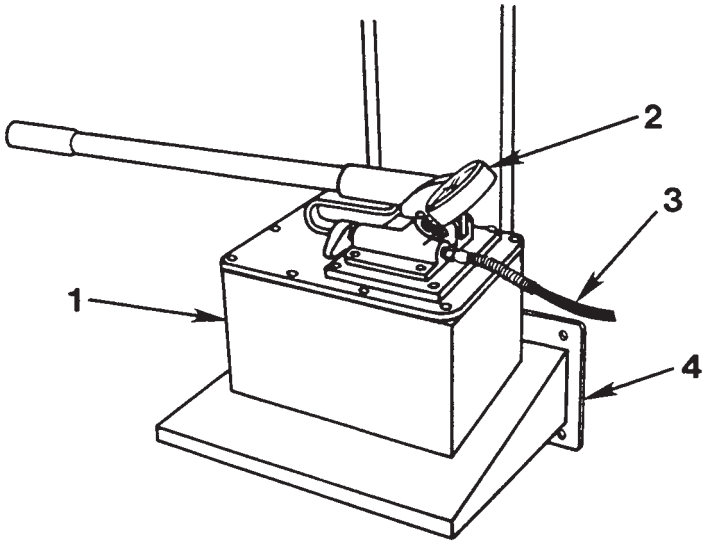

Item No.	Part No.	No. Req'd	Description
1	**P460**	1	Hand Pump (See Form No. 101475)
2	**9069**	1	Gauge
3	**350158**	1	Hydraulic Hose (For SPM5513)
	9769E	1	Hydraulic Hose (For SPM5513CE)
4	**50931**	1	Pump Mounting Bracket
	PARTS INCLUDED BUT NOT SHOWN		
	350989	1	CE Decal (For SPE5513CE)

ELECTRIC PUMP

(used on SPE5513DS, SPE5513DS-220, SPE5513DSCE, & SPE5513SCE)

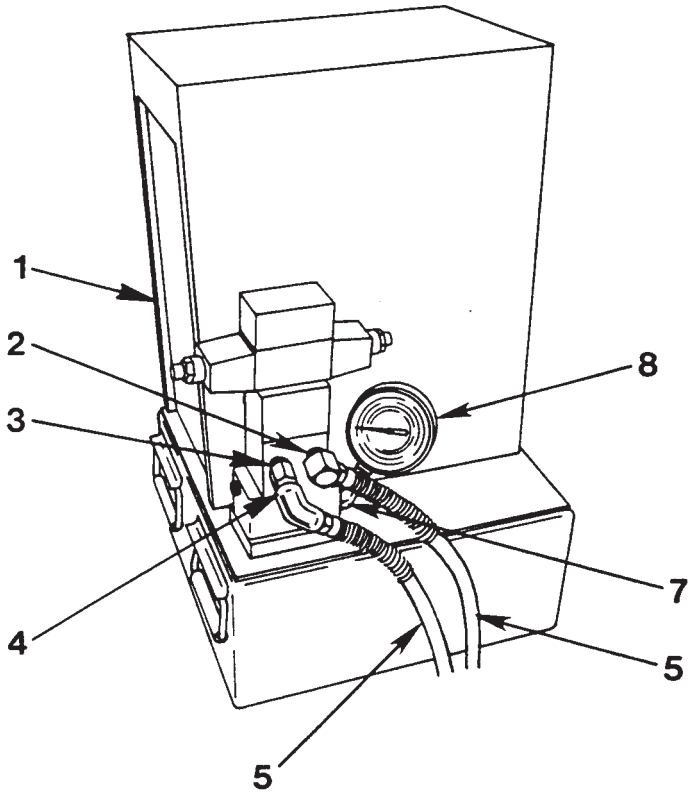

Item No.	Part No.	No. Req'd	Description
1	**PQ604S**	1	Electric Pump (For SPE5513DS; See Form No. 100384)
	PQ604S-50-220	1	Electric Pump (For SPE5513DS-220; See Form No. 100384)
	PE174SM-E220	1	Electric Pump (For SPE5513DSCE; See Form No. 108083)
	PE172S-E220	1	Electric Pump (For SPE5513SCE; See Form No. 108083)
2	**10474**	1	90° Elbow Fitting
3	**9683**	1	Straight Fitting
4	**10647**	1	90° Elbow Fitting
5	**36887**	2	Hydraulic Hose (For SPE5513DS & SPE5513DS-220)
	9769E	1	Hydraulic Hose (For SPE5513SCE)
	9768E	1	Hydraulic Hose (For SPE5513DSCE)
7	**10645**	1	45° Elbow Fitting
8	**9069**	1	Gauge
	PARTS INCLUDED BUT NOT SHOWN		
	350989	1	CE Decal (For SPE5513SCE)

ELECTRIC PUMP

(used on SPE5513S & SPE5513S-220)

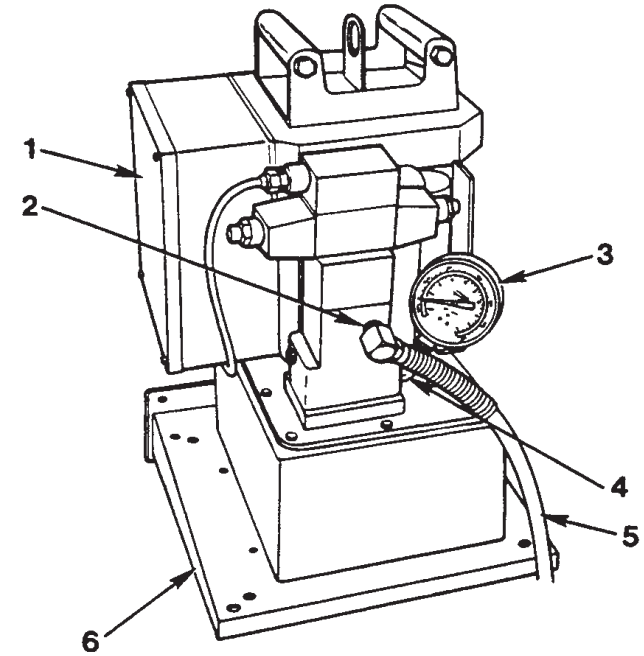

Item No.	Part No.	No. Req'd	Description
1	**PE213S**	1	Electric Pump (For SPE5513S; See Form No. 100807)
	PE213S-50-220	1	Electric Pump (For SPE5513S-220; See Form No. 100807)
2	**10474**	1	90° Elbow Fitting
3	**9069**	1	Gauge
4	**10645**	1	45° Elbow Fitting
5	**350158**	1	Hydraulic Hose
6	**50931**	1	Mounting Bracket
	10048	4	Cap Screw (Not shown; For mounting pump; 3/8-16 x 7/8 Lg.)

HAND PUMP

(used on SPM556, SPM556CE, & 1846)

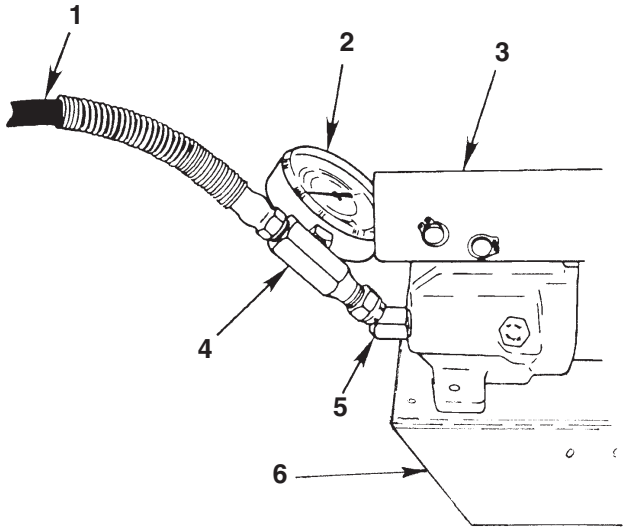

Item No.	Part No.	No. Req'd	Description
1	**350158**	1	Hydraulic Hose (For SPM556 & 1846)
	9769E	1	Hydraulic Hose (For SPM556CE)
2	**9069**	1	Gauge
3	**4016**	1	Hand Pump (For 1846; See Form No. 101800)
	P159	1	Hand Pump (For SPM556 & SPM556CE; See Form No. 101796)
4	**9670**	1	Tee Adapter
5	**10648**	1	45° Elbow
6	**42733WH2**	1	Pump Mounting Bracket

PARTS INCLUDED BUT NOT SHOWN

	350989	1	CE Decal (For SPM556CE)

AIR PUMP

(used on SPA556, SPA556CE, & 1847)

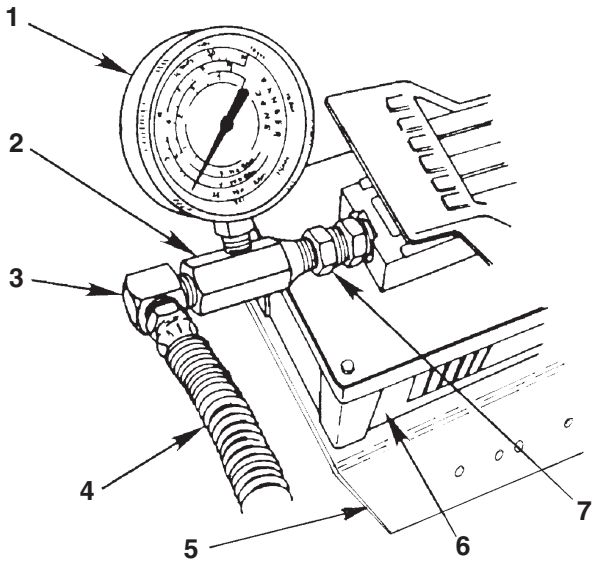

Item No.	Part No.	No. Req'd	Description
1	**9069**	1	Gauge
2	**9670**	1	Tee Adapter
3	**10474**	1	90° Elbow Fitting
4	**9781**	1	Hydraulic Hose (For 1847 & SPA556)
	9769E	1	Hydraulic Hose (For SPA556CE)
5	**421125**	1	Pump Mounting Bracket
6	**4022**	1	Air Pump (For 1847; See Form No. 101695)
	PA6	1	Air Pump (For SPA556 & SPA556CE; See Form No. 101652)
7	**10649**	1	Straight Fitting

PARTS INCLUDED BUT NOT SHOWN

	350989	1	CE Decal (For SPA556CE)