SPX OTC

SPX Corporation
655 Eisenhower Drive
Owatonna, MN 55060-0995 USA
Phone: (507) 455-7000
Tech. Serv.: (800) 533-6127
Fax: (800) 955-8329
Order Entry: (800) 533-6127
Fax: (800) 283-8665
International Sales: (507) 455-7223
Fax: (507) 455-7063

Form No. 106412

Parts List and Operating Instructions for: **1727**

Service Jack

Max. Capacity: 2 Tons

Application: Designed to lift a wide range of motor vehicles.

This parts list covers Service Jacks made with a date code ranging from 100151 to 109285. (The date code can be found on a silver plaque located inside the frame rail above the pump.) This date indicates the model of the jack.

When you receive a parts kit, parts for all models will be included. Use only the parts for your jack; discard other parts.

Saddle Low Point:	3 3/4 in.
Saddle High Point:	22 1/2 in.
Lifting Range:	18 3/4 in.
Handle Length:	48 in.

Item No.	Part No.	Qty.	Description
1	**501238**	1	Handle Ass'y *(not shown)*
2	**12368**	1	Hex Hd. Cap Screw *(3/8-16)*
3	**509167**	1	U-joint
4	**10549**	1	Roll Pin
5	**501294**	1	Hydraulic Ass'y *(see back)*
6	**502032**	1	Decal
7	**501237**	1	Saddle
8	**217176**	1	Cotter Pin *(1/8-2")*
9	**501800**	2	Front Wheel
10	**15953**	2	Washer *(3/4")*
11	**14855**	6	Retaining Ring *(3/4")*
12	**501814**	2	Anchor Pin
13	**513781**	2	Spring
14	**501394**	1	Rod
15	**501803**	2	Spacer Bushing
16	**501288**	2	Caster
17	**10252**	2	Lockwasher *(3/4")*
18	**10397**	2	Hex Nut *(3/4")*
19	**501818**	4	Spacer
20	**501805**	4	Bolt *(5/8-11 x 1")*
21	**501817**	1	Grease Fitting *(not shown)*
22	**501401**	1	Load Block
23	**10236**	2	Washer
	Parts Included but not Shown		
	501234	1	Pump Roller
	516675	1	Groove Pin

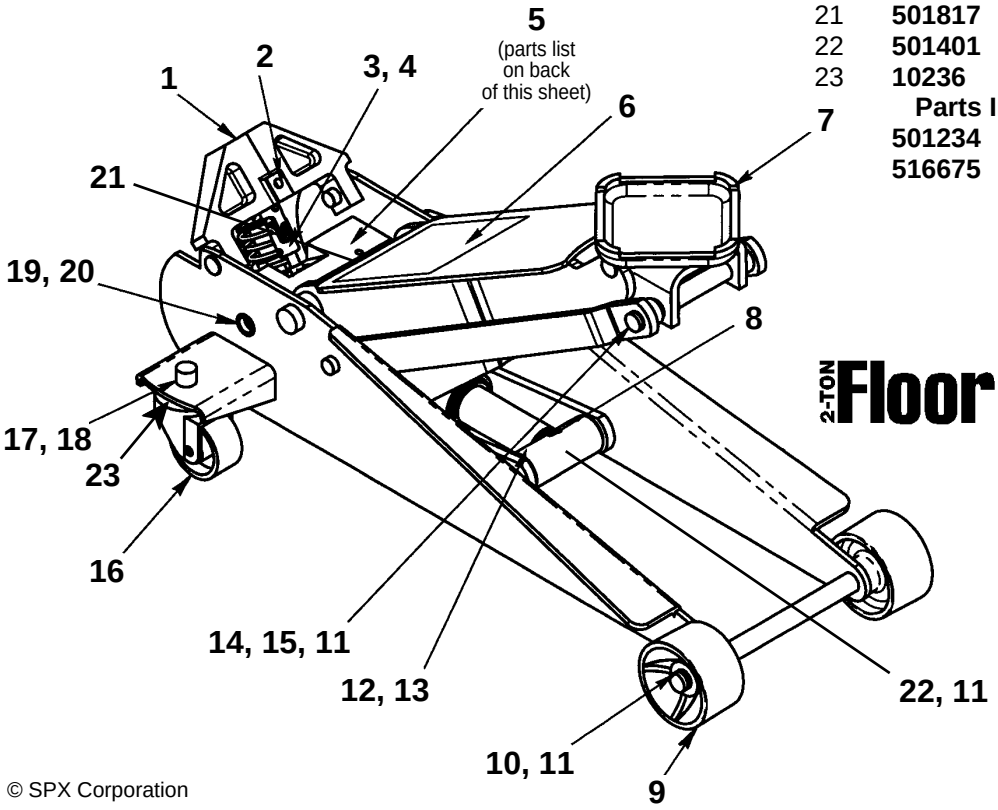

2-TON FloorBoss™

Sheet No.	1 of 2
Issue Date:	Rev. F (9-18-03)

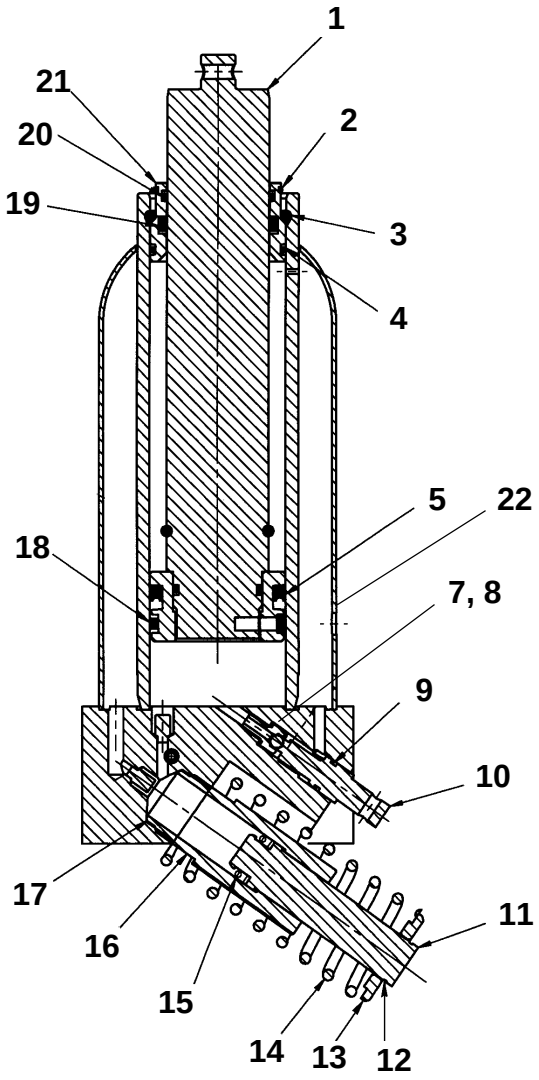

Shaded areas reflect last revisions made to this form.

No. 501294 Hydraulic Assembly

Item No.	Part No.	Qty.	Description
1	**501350**	1	Rod Assembly
2	✻ **501351**	1	Retaining Ring
3	✻ **501299**	1	Retaining Ring
4	✻ **10913**	1	O-ring
5	✻ **501807**	1	U-cup Packing
7	✻▲ **501804**	1	Ball Seat Screw *(torque to 130 in.•lbs.)*
8	✻▲ **12223**	1	Ball
9	✻▲ **10268**	1	O-ring
10	✻▲ **501398**	1	Pump Release Valve
11	**501354**	1	Pump Rod
12	**501806**	1	Retaining Ring
13	**501403**	1	Spring Retainer
14	**13938**	1	Spring
15	✻ **501397**	1	U-cup
16	**501355**	1	Pump Tube *(torque to 75 ft.•lbs.)*
17	✻ **501400**	1	Crush Washer
18	✻ **221271**	1	Wear Ring
19	✻ **501298**	1	Wear Ring
20	✻ **14739**	1	O-ring
21	**501300**	1	Gland
22	**221278**	1	Plug *(not shown)*
	220940	1	Rubber Stopper *(not shown)*

Parts marked with an asterisk (✻) are included in Seal Kit No. 501816.

Parts marked with a triangle (▲) are included in Pump Release Valve Repair Kit No. 501235.

When you receive a parts kit, parts for all models will be included. Use only the parts for your jack; discard other parts.

Bleeding Air from the System

Air can accumulate within a hydraulic system during shipment, or if the oil supply runs too low. This entrapped air causes the jack to respond slowly or feel “spongy.” The following procedure bleeds air from the system.

1. Remove the jack from service, and place it on a level surface.
2. Open the release valve by turning the handle all the way counterclockwise (CCW).
3. Pump the handle six full strokes.
4. Close the release valve by turning the handle all the way clockwise (CW).
5. Pump the handle until the lift arm is fully extended.
6. Lower the lift arm by turning the handle all the way counterclockwise (CCW).
7. Test the jack for normal operation. If the lift pad doesn’t rise to the correct height, repeat Steps 2–6. If this doesn't solve the problem, call the OTC Technical Services Dept. at (800) 533-6127.

Safety Precautions

CAUTION: To prevent personal injury and damage to equipment,

- **Read, understand, and follow all instructions, including ASME PALD Part 10 for service jacks. If the operator cannot read English, operating instructions and safety precautions must be read and discussed in the operator's native language.**

— ***Si el operador no puede leer inglés, las instrucciones de operación y las precauciones de seguridad deberán leerse y comentarse en el idioma nativo del operador.***

— ***Si l'utilisateur ne peut lire l'anglais, les instructions et les consignes de sécurité doivent lui être expliquées dans sa langue maternelle.***

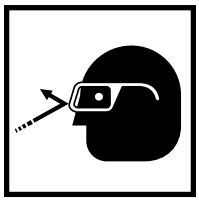

- **Before using the service jack to lift a vehicle, refer to the vehicle service manual to determine recommended lifting surfaces on the vehicle chassis.**
- **Wear eye protection that meets ANSI Z87.1 and OSHA standards.**
- **Inspect the jack before each use; do not use the jack if it's damaged, altered, or in poor condition. Take corrective action if any of the following conditions are found: cracked or damaged housing; excessive wear, bending, or other damage; leaking hydraulic fluid; scored or damaged piston rod; loose hardware; modified or altered equipment.**

- **A load must never exceed the rated lifting capacity of the jack.**
- **Use the jack on a hard, level surface. The jack must be free to roll without any obstructions while lifting or lowering the vehicle. The wheels of the vehicle must be in the straight-ahead position, and the hand brake released.**
- **Use the jack for lifting purposes only. Stay clear of a lifted load. Place support stands under the axles before working on the vehicle.**
- **Center the load on the saddle. Off-center loads can damage seals and cause jack failure. Lift only dead weight.**
- **Do not use blocks or other extenders between the saddle and the load being lifted.**
- **Do not modify the jack or use adapters unless approved or supplied by OTC.**
- **Lower the jack slowly and carefully while watching the position of the jack saddle.**
- **Use only approved hydraulic fluid (Chevron AW Hydraulic Oil or equivalent). The use of alcohol, hydraulic brake fluid, or transmission oil could damage seals and result in jack failure.**

This guide cannot cover every situation, so always do the job with safety first.

Operating Instructions

Setup

1. Loosen the thumb screw on the front of the handle socket.
2. Grease the socket opening. Insert the handle.
3. Torque the thumb screw to 150–200 in. lbs.

Operation

1. Close the release valve by turning the handle clockwise (CW) as far as it will go.
2. Position the jack under the vehicle. **IMPORTANT: Use the manufacturer's recommended lifting points on the chassis.**
3. Pump the jack handle to raise the saddle to the contact point.
4. Check the placement of the jack; the load must be centered on the jack saddle. **IMPORTANT: Avoid wheel obstructions such as gravel, tools, or uneven expansion joints.**
5. Finish lifting the vehicle by pumping the handle. Do not attempt to raise the jack beyond its travel stops.
6. Place approved support stands under the vehicle at points that will provide stable support. Before making repairs on the vehicle, lower it onto the support stands by SLOWLY and CAREFULLY turning the handle counterclockwise (CCW).

Preventive Maintenance

IMPORTANT: The greatest single cause of failure in hydraulic units is dirt. Keep the service jack clean and well lubricated to prevent foreign matter from entering the system. If the jack has been exposed to rain, snow, sand, or grit, it must be cleaned before it is used.

1. Store the jack in a well-protected area where it will not be exposed to corrosive vapors, abrasive dust, or any other harmful elements.
2. Regularly lubricate the moving parts in the wheels, arm, and handle.
3. Replace the oil in the reservoir at least once per year. To check the oil level, lower the lift arm completely. Remove the rubber filler plug. Oil level should be at the bottom of the filler plug hole. If necessary, add approved anti-wear hydraulic jack oil, and install the filler plug. **IMPORTANT: The use of alcohol, hydraulic brake fluid, or transmission oil could damage the seals and result in jack failure.**
4. Inspect the jack before each use. Take corrective action if any of the following problems are found:
   a. cracked, damaged housing
   b. excessive wear, bending, other damage
   c. leaking hydraulic fluid
   d. scored, damaged piston rod
   e. loose hardware
   f. modified equipment
5. Keep warning labels and instructional decals clean and readable. Use a mild soap solution to wash external surfaces of the jack.

Troubleshooting Guide

Repair procedures must be performed in a dirt-free environment by qualified personnel who are familiar with this equipment. **CAUTION: Inspection, maintenance, and repair procedures must be performed when the jack is free of a load (not in use).**

Trouble	Cause	Solution
Jack does not lift	1. Release valve is open.	*1. Close release valve.*
	2. Low/no oil in reservoir.	*2. Fill with oil and bleed system.*
	3. Air-locked system.	*3. Bleed system.*
	4. Load is above capacity of jack.	*4. Use correct equipment.*
	5. Delivery valve and/or bypass valve not working correctly.	*5. Clean to remove dirt or foreign matter. Replace oil.*
	6. Packing worn out or defective.	*6. Replace packing.*
Jack lifts only partially	1. Too much or not enough oil.	*1. Check oil level.*
Jack advances slowly	1. Pump not working correctly.	*1. Rework pump.*
	2. Leaking seals.	*2. Replace seals. (Seal kit No. 501816 is available from OTC.)*
Jack lifts load, but doesn't hold	1. Cylinder packing is leaking.	*1. Replace packing.*
	2. Valve not working correctly (suction, delivery, release, or bypass).	*2. Inspect valves. Clean and repair seat surfaces.*
	3. Air-locked system.	*3. Bleed system.*
Jack leaks oil	1. Worn or damaged seals.	*1. Replace seals.*
Jack will not retract	1. Release valve is closed.	*1. Open release valve all the way counterclockwise (CCW). May be necessary to clean release valve.*
Jack retracts slowly	1. Cylinder damaged internally.	*1. Send jack to OTC-authorized service center. (Refer to OTC Form No. 104031.)*
	2. Return spring is damaged.	*2. Replace return spring.*
	3. Link section is binding.	*3. Lubricate or replace link section.*