SPX Corporation
655 Eisenhower Drive
Owatonna, MN 55060-0995 USA
Phone: (507) 455-7000
Tech. Serv.: (800) 533-6127
Fax: (800) 955-8329
Order Entry: (800) 533-6127
Fax: (800) 283-8665
International Sales: (507) 455-7223
Fax: (507) 455-7063

Form No. 527900

Parts List & Operating Instructions for: **1521A**

Low Lift Transmission Jack

Max. Capacity: 1,000 lbs. (500 kg)

Hydraulic Unit Hardware and Handle

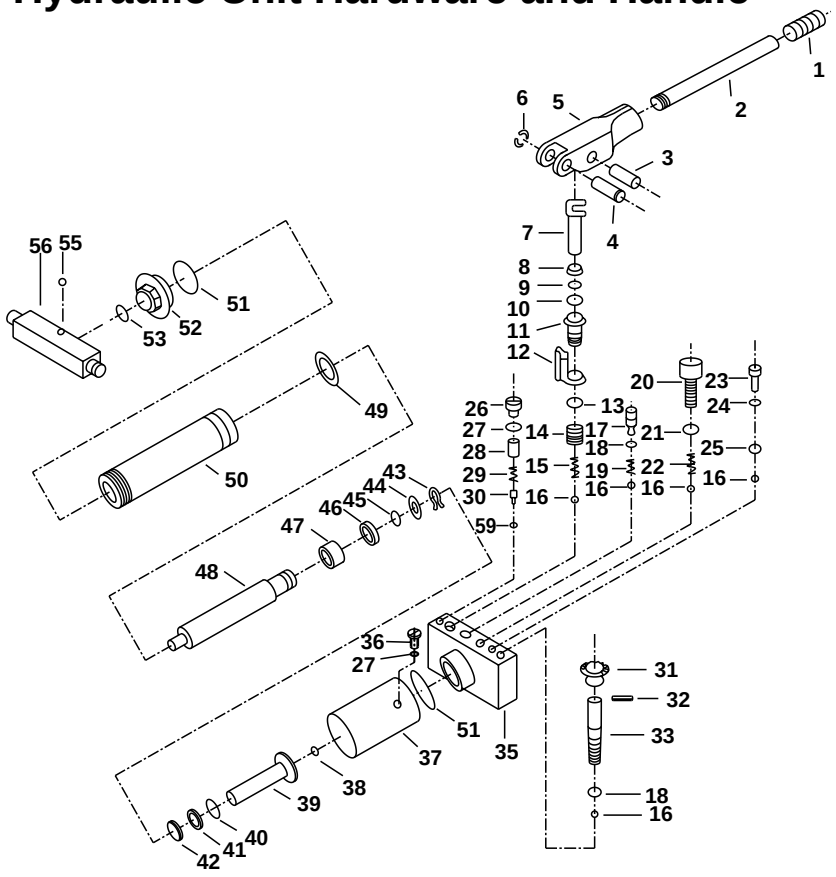

Parts List

Item Part No.	No. Reqd.	Description
1	1	Handle Grip
2	1	Handle
3	1	Rivet
4	1	Rivet
5	1	Socket
6	1	Snap Ring
7	1	Plunger
8	1	Wiper
9	1	Back-up Ring
10	1	O-ring
11	1	Pump
12	1	Pump Seat
13	1	Seal Ring
14	1	Screw
15	1	Spring
16	5	Ball
17	1	Screw
18	2	O-ring
19	1	Spring
20	1	Screw
21	1	Seal Ring
22	1	Spring
23	1	Screw
24	1	Seal Ring
25	1	Ball
26	1	Screw
27	1	O-ring
28	1	Screw
29	1	Spring
30	1	Ball Seat
31	1	Knob
32	1	Pin
33	1	Release Rod
34	2	Bolt
35	1	Valve Block
36	1	Oil Fill Plug
37	1	Reservoir
38	1	O-ring
39	1	Ram
40	1	Retaining Ring
41	1	O-ring
42	1	Y-ring
43	1	Retaining Ring
44	1	Washer
45	1	O-ring
46	1	Retaining O-ring
47	1	Bushing
48	1	Piston Rod
49	1	O-ring

Continued ☞

Issue Date: December 14, 2004 Rev. B

© 2004 SPX Corporation

Hydraulic Unit Base

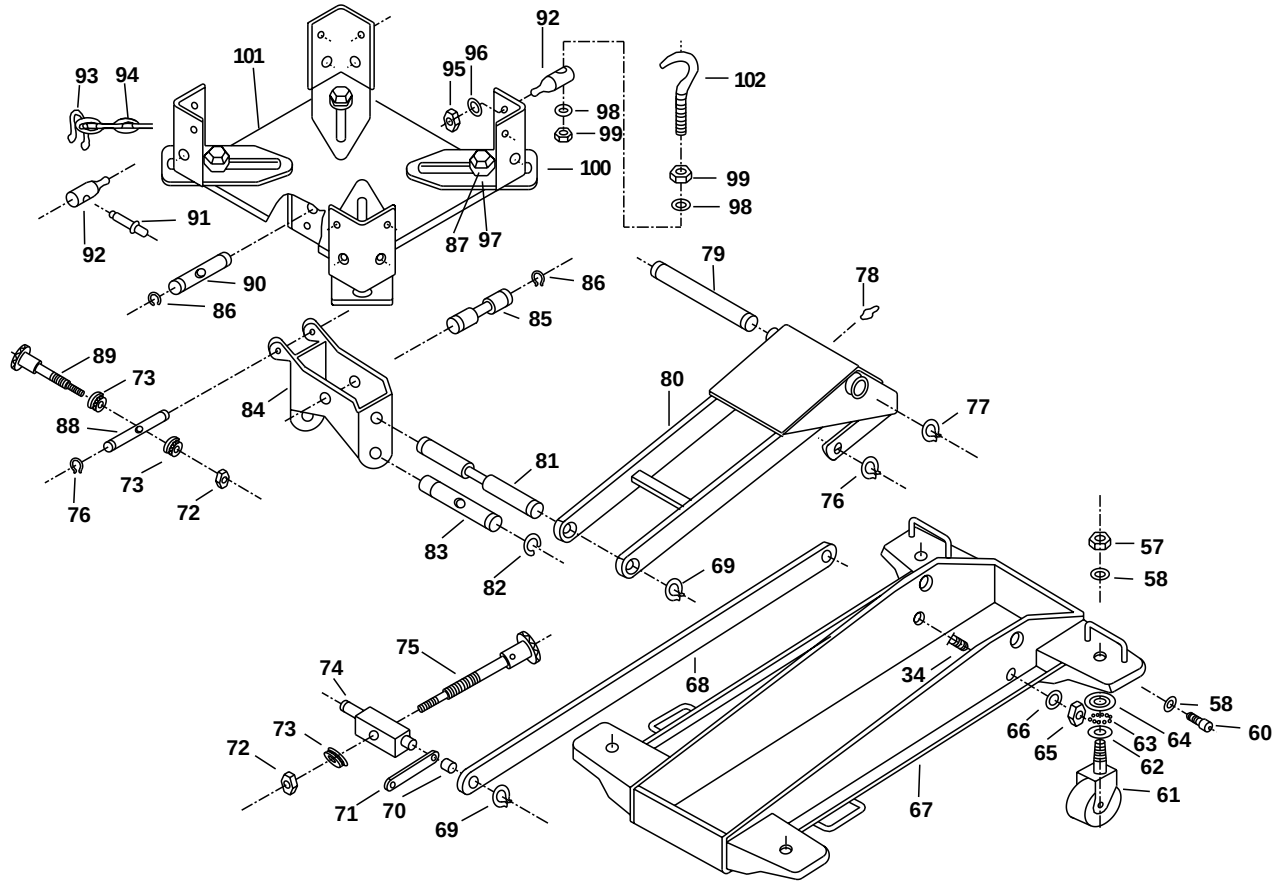

Parts List contd.

Item Part No.	No. Reqd.	Description
50	1	Cylinder
51	2	Seal Ring
52	1	Cylinder Nut
53	1	O-ring
55	1	Pin
56	1	Link Rod
57	4	Nut
58	6	Lock Washer
59	1	Ball
60	2	Screw
61	4	Caster Assembly
62	4	Lower Plate
63	80	Ball
64	4	Upper Plate
65	2	Nut
66	2	Lock Washer
67	1	Side Plate
68	2	Long Link Rod
69	4	Snap Ring
70	2	Spacer
71	2	Short Link Rod
72	2	Nut
73	3	Thrust Bearing
74	1	Guide Axle
75	1	Screw
76	4	Snap Ring

Item Part No.	No. Reqd.	Description
77	2	Snap Ring
78	1	Grease Fitting
79	1	Shaft Arm
80	1	Lifting Arm Assembly
81	1	Axle
82	2	Retaining Ring
83	1	Axle
84	1	Saddle Base
85	1	Axle
86	4	Snap Ring
87	4	Screw
88	1	Axle
89	1	Screw
90	1	Axle
91	2	Chain Screw
92	4	Hook Guide
93	2	Chain Connector
94	2	Chain
95	4	Nut
96	4	Washer
97	4	Washer
98	4	Washer
99	4	Nut
100	4	Containing Angle
101	1	Saddle
102	1	Chain Hook

Repair Kits

Caster Kit
No. 527901 includes:

Item No.	Qty.	Description
57	1	Nut
58	1	Lock Washer
61	1	Caster Assembly
62	1	Lower Plate
63	20	Ball
64	1	Upper Plate

Chain Kit
No. 527904 includes:

Item No.	Qty.	Description
91	2	Chain Screw
92	4	Hook Guide
93	2	Chain Connector
94	2	Chain
95	4	Nut
96	4	Washer
98	4	Washer
99	4	Nut
102	1	Chain Hook

Grease Fitting
No. 527910 includes:

Item No.	Qty.	Description
78	1	Grease Fitting

Handle Kit
No. 527903 includes:

Item No.	Qty.	Description
1	1	Handle Grip
2	1	Handle

Handle Pivot Kit
No. 527917 includes:

Item No.	Qty.	Description
3	1	Rivet
4	1	Rivet
5	1	Socket
6	1	Snap Ring

Hydraulic Unit Hardware Kit
No. 527918 includes:

Item No.	Qty.	Description
16	3	Ball
17	1	Screw
18	1	O-ring
19	1	Spring
20	1	Screw
21	1	Seal Ring
22	1	Spring
23	1	Screw
24	1	Seal Ring
25	1	Ball
26	1	Screw
27	1	O-ring
28	1	Screw
29	1	Spring
30	1	Ball Seat
59	1	Ball

Hydraulic Unit Kit
No. 527911 includes:

Item No.	Qty.	Description
7	1	Plunger
8	1	Wiper
9	1	Back-up Ring
10	1	O-ring
11	1	Pump
12	1	Pump Seat
13	1	Seal Ring
14	1	Screw
15	1	Spring
16	5	Ball
17	1	Screw
18	2	O-ring
19	1	Spring
20	1	Screw
21	1	Seal Ring
22	1	Spring
23	1	Screw
24	1	Seal Ring
25	1	Ball
26	1	Screw
27	2	O-ring
28	1	Screw
29	1	Spring
30	1	Ball Seat
31	1	Knob
32	1	Pin
33	1	Release Rod
35	1	Valve Block
36	1	Oil Fill Plug
37	1	Reservoir
38	1	O-ring
39	1	Ram
40	1	Retaining Ring
41	1	O-ring
42	1	Y-ring
43	1	Retaining Ring
44	1	Washer
45	1	O-ring
46	1	O-ring Retaining
47	1	Bush
48	1	Piston Rod
49	1	O-ring
50	1	Cylinder
51	2	Seal Ring
52	1	Cylinder Nut
53	1	O-ring
59	1	Ball

Load Block Kit
No. 528673 includes:

Item No.	Qty.	Description
55	1	Pin
56	1	Link Rod
76	2	Snap Ring

Main Pivot Pin Kit
No. 528674 includes:

Item No.	Qty.	Description
77	2	Snap Ring
79	1	Shaft Arm

Pivot Screw (Long) Kit
No. 527906 includes:

Item No.	Qty.	Description
70	2	Spacer
71	2	Short Link Rod
72	1	Nut
73	1	Thrust Bearing
74	1	Guide Axle
75	1	Screw
82	2	Retaining Ring
83	1	Axle

Pivot Screw (Short) Kit
No. 527907 includes:

Item No.	Qty.	Description
72	2	Nut
73	3	Thrust Bearing
76	4	Snap Ring
86	4	Snap Ring
88	1	Axle
89	1	Screw
90	1	Axle

Pump Station Kit
No. 527913 includes:

Item No.	Qty.	Description
7	1	Plunger
8	1	Wiper
9	1	Back-up Ring
10	1	O-ring
11	1	Pump
12	1	Pump Seat
13	1	Seal Ring
14	1	Screw
15	1	Spring
16	1	Ball

Ram Kit
No. 527916 includes:

Item No.	Qty.	Description
38	1	O-ring
39	1	Ram
40	1	Retaining Ring
41	1	O-ring
42	1	Y-ring
43	1	Retaining Ring
44	1	Washer
45	1	O-ring
46	1	O-ring Retaining
47	1	Bush
48	1	Piston Rod
49	1	O-ring
50	1	Cylinder
51	2	Seal Ring
53	1	O-ring

Release Valve Kit
No. 527914 includes:

Item No.	Qty.	Description
16	1	Ball
18	1	O-ring
31	1	Knob
32	1	Pin
33	1	Release Rod

Reservoir Kit
No. 527915 includes:

Item No.	Qty.	Description
37	1	Reservoir
51	2	Seal Ring
52	1	Cylinder Nut
53	1	O-ring

Saddle
No. 527902 includes:

Item No.	Qty.	Description
101	1	Saddle

Saddle Angle Kit
No. 527905 includes:

Item No.	Qty.	Description
87	1	Screw
97	1	Washer
100	1	Containing Angle

Saddle Level Arms Kit
No. 527909 includes:

Item No.	Qty.	Description
34	2	Bolt
65	2	Nut
66	2	Lock Washer
68	2	Long Link Rod
69	2	Snap Ring

Saddle Pivot Base Kit
No. 527908 includes:

Item No.	Qty.	Description
69	2	Snap Ring
81	1	Axle
84	1	Saddle Base
85	1	Axle
86	2	Snap Ring

Seal Kit
No. 527912 includes:

Item No.	Qty.	Description
8	1	Wiper
9	1	Back-up Ring
10	1	O-ring
13	1	Seal Ring
18	2	O-ring
21	1	Seal Ring
24	1	Seal Ring
27	2	O-ring
36	1	Oil Fill Plug
38	1	O-ring
40	1	Retaining Ring
41	1	O-ring
42	1	Y-ring
43	1	Retaining Ring
44	1	Washer
45	1	O-ring
46	1	O-ring Retaining
49	1	O-ring
51	2	Seal Ring
53	1	O-ring

Issue Date: December 14, 2004 Rev. B

© 2004 SPX Corporation

Safety Precautions

WARNING: To prevent personal injury and/or property damage,

- **Study, understand, and follow all instructions before operating this device. If the operator cannot read or understand these operating instructions and safety precautions, they must be read and discussed in the operator's native language.**
- **Wear eye protection that meets ANSI Z87.1 and OSHA standards.**

- **Use only on hard, level surfaces.**
- **Inspect the jack before each use; do not use the jack if it is damaged, altered, or in poor condition.**
- **No alterations shall be made to this product unless approved by OTC. If a modification is needed, contact OTC Technical Services.**

- **Use of this product is limited to the removal, installation, and transportation in the lowered position of only automotive or truck transmissions.**
- **Do not exceed the rated capacity of 1,000 lbs. (500 kg).**
- **Adequately support the vehicle before starting repairs.**
- **Stay out from underneath the load at all times.**
- **Secure the load to the jack.**
- **Lower the jack slowly and carefully while watching the position of the load.**
- **SLOWLY AND CAREFULLY move the jack around corners.**
- **Use only approved hydraulic fluid (Chevron AW Hydraulic Oil MV or equivalent). The use of alcohol or hydraulic brake fluid could damage seals and result in jack failure.**

Operating Instructions

1. Position the jack under the transmission.
2. Close the control valve.
3. Operate the pump handle to raise the boom and align the mounting plate with the transmission.
4. Remove the transmission according to the instructions in the vehicle service manual.
5. Position the transmission on the mounting plate, resting against the angle plates.
   - The mounting plate may be tilted forward and backward by turning the tilt knob.
   - The mounting plate may be tilted side-to-side by adjusting the two vertical hex head cap screws.
6. Secure the transmission to the mounting plate.
7. Lower the load by slowly opening the control valve. The control valve regulates how fast the boom is lowered.

Preventive Maintenance

IMPORTANT: Dirt is the greatest single cause of failure in hydraulic units. Keep the jack clean and well lubricated to prevent foreign matter from entering the system. If the jack has been exposed to rain, snow, sand, or grit, it must be cleaned before it is used.

1. Store the jack in a well-protected area where it will not be exposed to corrosive vapors, abrasive dust, or any other harmful element.
2. Regularly lubricate the moving parts.
3. Replace the oil in the reservoir at least once per year. To check the oil level, place the jack on level ground and lower the lift arm completely. Remove the filler plug. The oil level should be within 3/8" of the filler plug hole. If necessary, add approved anti-wear hydraulic jack oil, and install the filler plug again. **IMPORTANT: Use only approved hydraulic fluid (Chevron AW Hydraulic Oil MV or equivalent). The use of alcohol or hydraulic brake fluid could damage seals and result in jack failure.**
4. Inspect the jack before each use. Take corrective action if any of the following problems are found:
   a. Cracked or damaged housing
   b. Excessive wear, bending, or other damage
   c. Leaking hydraulic fluid
   d. Scored or damaged piston rod
   e. Malfunctioning swivel heads or adjusting screws
   f. Loose hardware
   g. Modified or altered equipment

Troubleshooting Guide

Repair procedures must be performed in a dirt-free environment by qualified personnel who are familiar with this equipment.

Trouble	Cause	Solution
Jack does not lift	1. Release valve is open 2. Low/no oil in reservoir 3. Air-locked system 4. Load is above capacity of jack 5. Delivery valve and/or bypass valve not working correctly 6. Packing worn out or defective	*1. Close release valve.* *2. Fill with oil and bleed system.* *3. Bleed system.* *4. Use correct equipment.* *5. Clean to remove dirt or foreign matter. Replace oil.* *6. Replace power unit.*
Jack lifts only partially	1. Too much or not enough oil	*1. Check oil level.*
Jack advances slowly	1. Pump not working correctly 2. Leaking seals	*1. Replace power unit.* *2. Replace power unit.*
Jack lifts load, but doesn't hold	1. Cylinder packing is leaking 2. Valve not working correctly (suction, delivery, release, or bypass) 3. Air-locked system	*1. Replace power unit.* *2. Inspect valves. Clean and repair seat surfaces.* *3. Bleed system.*
Jack leaks oil	1. Worn or damaged seals	*1. Replace power unit.*
Jack will not retract	1. Release valve is closed	*1. Open or clean release valve.*
Jack retracts slowly	1. Cylinder damaged internally 2. Link section is binding	*1. Send jack to OTC authorized service center for repair.* *2. Lubricate link section.*

Issue Date: December 14, 2004 Rev. B

© 2004 SPX Corporation