Operating Instructions & Parts Manual

Telescopic Transmission Jack

Model
41003

Capacity
1000 lbs

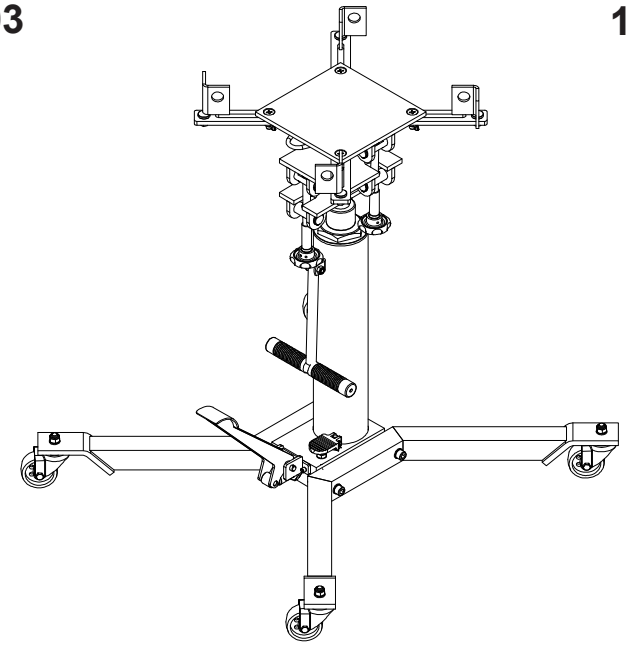

This is the safety alert symbol. It is used to alert you to potential personal injury hazards. Obey all safety messages that follow this symbol to avoid possible injury or death.

⚠ ADVERTENCIA

- Leer, comprender, y seguir las instrucciónes antes de utilizar el aparato.
- El manual de instrucciónes y la información de seguridad deben estar comunicado en lengua del operador antes del uso.
- No seguir estas indicaciónes puede causar daños personales o materiales.

⚠ WARNING

To avoid **crushing and related injuries**:

- **NEVER** work on, under or around a load supported only by a hydraulic jack.
- **ALWAYS** use adequately rated jack stands.

SFA Companies
http://www.omegalift.com

Read this manual and follow all the Safety Rules and Operating Instructions before using this product.

Made in China
41003-M0 03/09

SAFETY AND GENERAL INFORMATION

Save these instructions. For your safety, read, understand, and follow the information provided with and on this jack. The owner and operator shall have an understanding of this jack and safe operating procedures before attempting to use. The owner and operator shall be aware that use and repair of this product may require special skills and knowledge. Instructions and safety information shall be conveyed in the operator's native language before use of this jack is authorized. If any doubt exists as to the safe and proper use of this jack, remove from service immediately.

Inspect before each use. Do not use if broken, bent, cracked, or damaged parts (including labels) are noted. Any jack that appears damaged in any way, operates abnormally or is missing parts, shall be removed from service immediately. If the jack has been or suspected to have been subjected to a shock load (a load dropped suddenly, unexpectedly upon it), immediately discontinue use until jack has been checked by a factory authorized service center (contact distributor or manufacturer for list of Authorized Service Centers). It is recommended that an annual inspection be done by qualified personnel. Replace worn or damaged parts and assemblies with Omega Authorized Replacement Parts only. Labels and Operator's Manuals are available from manufacturer.

PRODUCT DESCRIPTION

Omega Telescopic Transmission Jack is designed to be used as an aid in the removal and installation of automotive and light truck transmissions, transfer cases and transaxles. It is intended for use under an overhead lift or in a garage pit.

Do not use for any purpose other than those uses outlined above.

SPECIFICATIONS

Model	Capacity	Min. Height	Max. Height	Saddle Base	Extended Saddle Area	Jack Size (L x W)
41003	1000 lb	36"	73-1/8"	9-7/8" x 9-7/8"	18-7/8" x 18-7/8"	34-1/2" x 34-3/8"

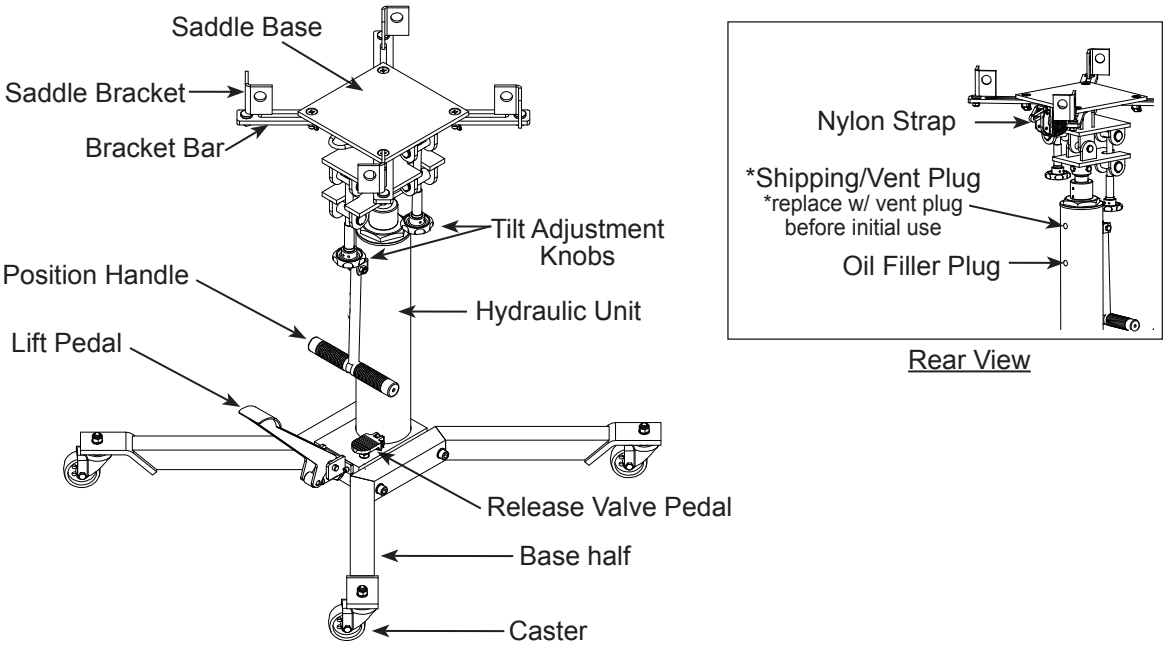

Figure 1 - Transmission Jack Components

PREPARATION

Assembly (Refer to Figure 1)

Estimated Assembly Time:
20 minutes.

Tools Required for Assembly:
Large Philips screwdriver, 19mm wrench, socket wrench and torque wrench.

1. Package contents:
   (a) Hydraulic unit,
   (b) Saddle unit,
   (c) Base half - two (2) pieces,
   (d) Caster - four (4) pieces,
   (e) Saddle bracket & bracket bar - four (4) sets,
   (f) Position handle, and
   (g) Hardware

2. Attach all four casters to the base halves and secure with washers and M12 locknuts.
3. Attach either one of the two base halves to the base of the hydraulic unit, then secure using M12x70 bolts and lock washers. Apply the same procedure to the other base half. Use torque wrench to tighten to 30 lb.ft.. Do not overtighten.
4. Attach the position handle onto Hydraulic unit with M10x40 bolt and locknut.
5. Position the saddle unit above the ram plunger, place the saddle socket onto the ram plunger. Secure with two M12x20 bolts provided.
6. Secure all four bracket bars to the saddle with M12x40 screws and wing nuts. Then attach saddle brackets onto the bracket bars with M10 nuts.

Before Use

1. Verify that the product and the application are compatible, if in doubt call Omega Technical Service (888) 332-6419.
2. Before using this product, read the operator's manual completely and familiarize yourself thoroughly with the product, its components and recognize the potential hazards associated with its use.
3. Press the release valve pedal, ensure that saddle is fully lowered. Remove shipping plug (shipping plug is located above the oil filler plug). Ensure oil level is just below the rim of the oil filler hole. ***Reinstall*** with ***vent plug*** provided.
4. Check to ensure that jack rolls freely, that the pump and release valve operate smoothly. Raise and lower the unloaded jack throughout the advertised lift range before putting into service.
5. Replace worn or damaged parts and assemblies with Factory Authorized Replacement Parts only. Lubricate as instructed in Maintenance Section.

⚠ WARNING

- **Read, understand, and follow** all printed material provided with and on this product **before use**.
- **Do not** exceed rated capacity.
- Use **only** on hard, level surfaces.
- **Adequately support the vehicle before starting repairs.**
- If loaded jack must be moved, make certain that load is secured by appropriate means, is stable, is in the **lowest possible position**, is moved over a smooth, hard level surface and that the l**ifting platform is level**.
- Use of this product is **limited to removal, installation, and transportatio**n of **automotive and light truck transmissions, transfer cases and transaxles**.
- Use only adapters / accessories provided by the manufacturer of this transmission jack.
- Use only adapters / accessories whose **rated capacity is greater** than the rated capacity of this jack.
- Ensure the center of gravity is **center loaded** on the saddle.
- Never use this device as a work/repair station. **Transfer** the **load immediately** to a suitable work station.
- Do not modify this product.
- **Failure to heed** these markings may **result** in **personal injury and/or property damage**.

⚠ WARNING

To avoid **crushing and related injuries**:

- **Never** work on, under or around a load supported only by hydraulic jack.
- **Be alert** and **sober** when using this product. Do not operate under the influence of drugs or alcohol.

OPERATION

⚠ *Ensure the transmission is centered on the jack. An off-center transmission could cause the jack to tip over resulting in personal injury or property damage. For your safety, do not exceed 10 degree tilt angle of the saddle assembly in all directions.*

⚠ *Keep safety strap secured. Be sure all tools and personnel are clear before lowering load.*

Raise saddle:

1. Pump lift pedal until saddle reaches desired position.
2. Follow vehicle manufacturers recommended procedures for removing the load as outlined in vehicle service manual or repair guide.
3. Secure load with nylon strap.
4. Ensure load's center of gravity is centered on the saddle, load is stable and in lowest position before moving jack.

Lower saddle:

1. Slowly, gently apply downward pressure to the release valve pedal until the load is completely lowered.
2. Immediately transfer the load to an appropriate repair fixture.

MAINTENANCE

Important: Use only good grade hydraulic jack oil. Avoid mixing different types of fluid and NEVER use brake fluid, turbine oil, transmission fluid, motor oil or glycerin. Improper fluid can cause premature failure of the jack and the potential for sudden and immediate loss of load. Omega recommends Mobil DTE 13M or equivalent.

Adding oil

1. With saddle fully lowered, set jack in its upright, level position. Remove oil filler plug.
2. Fill until oil is level with the filler plug hole, reinstall oil filler plug.

Changing oil

For best performance and longest life, replace the complete fluid supply at least once per year.

1. With saddle fully lowered, set jack in its upright, level position. Remove the oil filler plug.
2. Lay the jack on its side and drain the fluid into a suitable container.

Note. Dispose of hydraulic fluid in accordance with local regulations.

3. Set jack in its level, upright position and fill with oil until just below the rim of the oil filler hole. Reinstall the oil filler plug.

Lubrication

A periodic coating of light lubricating oil to pivot points, axles and hinges will help to prevent rust and assure that wheels, casters and pump assemblies move freely.

Cleaning

Periodically check the pump piston and ram for signs of rust or corrosion. Clean as needed and wipe with an oily cloth.

Note: Never use sandpaper or abrasive material on these surfaces!

Storage

When not in use, store the jack with saddle in lowest position.

TROUBLESHOOTING

Symptom	Possible Causes	Corrective Action
Jack will not lift load	• Release valve not tightly closed • Load is too heavy	• Ensure release valve tightly closed • Consider higher capacity jack
Jack will lift, but not maintain pressure	• Release valve not tightly closed • Hydraulic unit malfunction	• Ensure release valve tightly closed • Discontinue use, Contact Omega Tech. Service
Jack will not lower after unloading	• Reservoir overfilled • Linkage binding	• Ensure load is removed, then drain fluid to proper level • Clean and lubricate moving parts
Poor lift performance	• Fluid level low • Hydraulic unit malfunction	• Ensure proper fluid level • Discontinue use, Contact Omega Tech. Service
Jack will not lift to full extension	• Fluid level low	• Ensure proper fluid level

Replacement Parts Illustration for Models 41003:

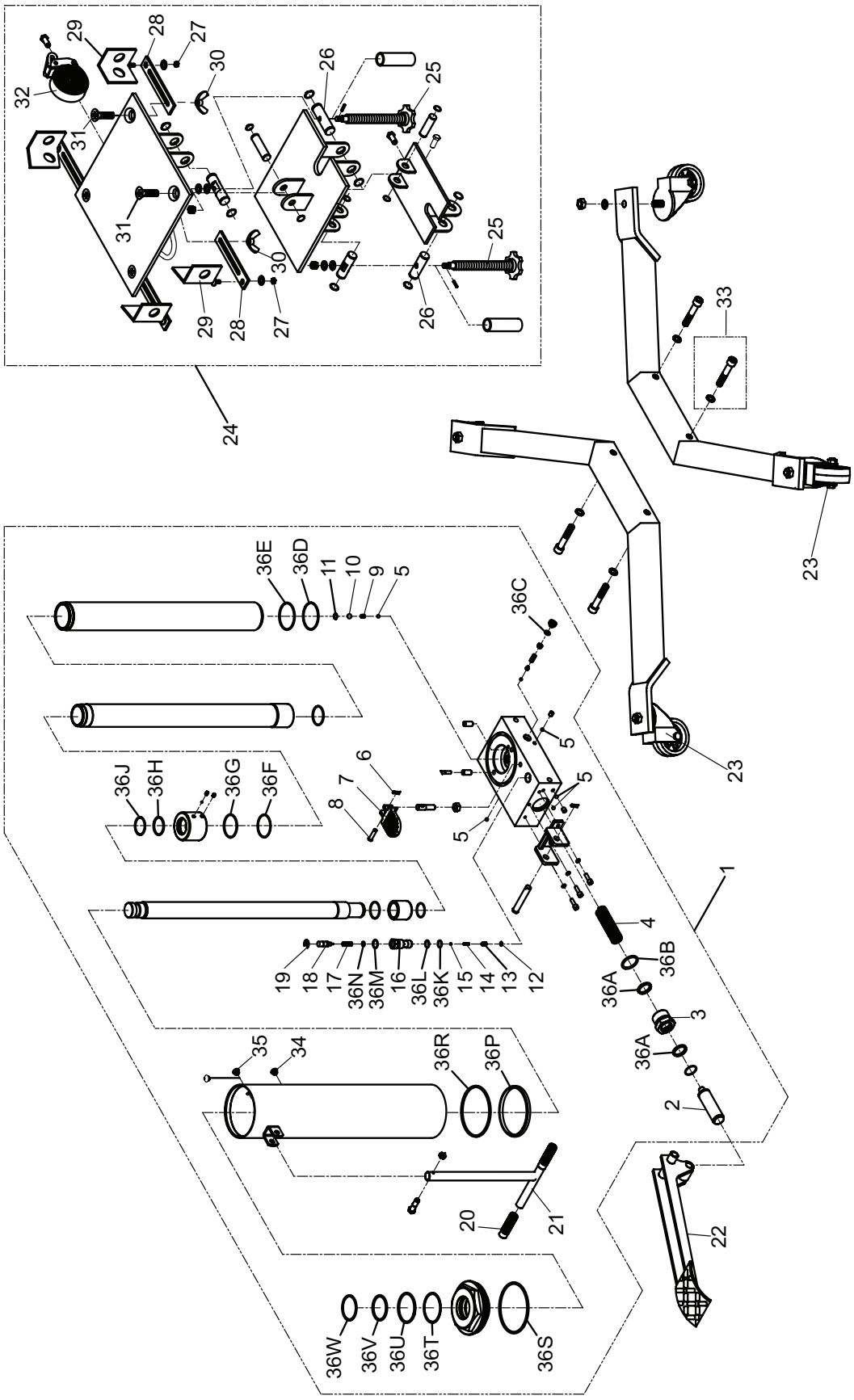

REPLACEMENT PARTS *(page 6 & 7)*

Not all components of the jack are replacement items, but are illustrated as a convenient reference of location and position in the assembly sequence. When ordering parts, please give the Model number and parts description. Call or write for current pricing: SFA Companies 10939 N. Pomona Ave. Kansas City, MO 64153, U.S.A.
E-Mail: sales@omegalift.com Tel: (888) 332-6419 Fax: (816) 891-6599 Website: http://www.omegalift.com

Replacement Parts List for Model 41003

Item	Part No.	Description	Qty
1	G390-10000-000	Hydraulic Unit	1
2	G390-15001-000	Pump Piston	1
3	G390-15002-000	Pump Piston Guide	1
4	G390-10004-000	Spring	1
5	5601-00635-000	Steel Ball	5
6	5405-02018-000	Retaining Pin	1
7	G390-10005-000	Release Pedal	1
8	5405-07027-000	Pin	1
9	G390-10008-000	Spring	1
10	5601-00952-000	Steel Ball	1
11	5309-00012-000	Washer	1
12	5309-00008-000	Washer	1
13	G390-17001-000	Throttle	1
14	G390-17002-000	Spring	1
15	5601-00476-000	Steel Ball	1
16	G150-04301-000	Releave Valve Nut	1
17	G150-04002-000	Spring	1
18	G150-04001-000	Release Valve	1
19	5305-00009-000	E-clip	1
20	G251-00007-000	Handle Grip	2
21	G390-20000-000	Handle	1
22	G390-30000-000	Foot Pedal	1
23	T250-05000-000	Caster	2
24	G390-40000-000	Saddle Assembly	1
25	T250-08000-000	Screw Assembly	2
26	T250-00002-000	Spindle	2
27	5202-00010-000	Nut, M10	4
28	T250-00006-000	Bracket Bar	4
29	T250-04000-000	Bracket	4
30	5207-00012-000	Wing Nut, M12	4
31	5107-12040-000	Philips Screw, M12x40	4
32	G390-41000-000	Nylon Strap Assy.	1
33	G390-90009-K01	Capscrew Kit (4 sets)	-
34	5905-00100-200	Plug, Hyd Oil	1
35	5905-00100-001	Plug, Vent	1
(*)	G3900S-103	Repair Kit	1

Repair Kit Parts (G3900S-103)

Item	Description	Qty
36A	U-cup Ram	2
36B	O-ring	1
36C	O-ring	1
36D	Back-up Washer	1
36E	O-ring	1
36F	Back-up Washer	1
36G	O-ring	1
36H	O-ring	1
36J	Back-up Washer	1
36K	Back-up Washer	1
36L	Seal	1
36M	O-ring	1
36N	Back-up Washer	1
36P	O-ring	1
36R	O-ring	1
36S	Back-up Washer	1
36T	O-ring	1
36U	Back-up Washer	1
36V	O-ring	1
36W	O-ring	1

ONE YEAR LIMITED WARRANTY

For a period of one (1) year from date of purchase, **SFA Companies** will repair or replace, at its option, without charge, any of its products which fails due to a defect in material or workmanship under normal usage. This limited warranty is a consumer's exclusive remedy.

Performance of any obligation under this warranty may be obtained by returning the warranted product, freight prepaid, to **SFA Companies** Warranty Service Department, 10939 N. Pomona Ave., Kansas City, MO 64153.

Except where such limitations and exclusions are specifically prohibited by applicable law, (1) THE CONSUMER'S SOLE AND EXCLUSIVE REMEDY SHALL BE THE REPAIR OR REPLACEMENT OF DEFECTIVE PRODUCTS AS DESCRIBED ABOVE. (2) **SFA Companies** SHALL NOT BE LIABLE FOR ANY CONSEQUENTIAL OR INCIDENTAL DAMAGE OR LOSS WHATSOEVER. (3) ANY IMPLIED WARRANTIES, INCLUDING WITHOUT LIMITATION THE IMPLIED WARRANTIES OF MERCHANTABILITY AND FITNESS FOR A PARTICULAR PURPOSE, SHALL BE LIMITED TO ONE YEAR, OTHERWISE THE REPAIR, REPLACEMENT OR REFUND AS PROVIDED UNDER THIS EXPRESS LIMITED WARRANTY IS THE EXCLUSIVE REMEDY OF THE CONSUMER, AND IS PROVIDED IN LIEU OF ALL OTHER WARRANTIES, EXPRESS OR IMPLIED. (4) ANY MODIFICATION, ALTERATION, ABUSE, UNAUTHORIZED SERVICE OR ORNAMENTAL DESIGN VOIDS THIS WARRANTY AND IS NOT COVERED BY THIS WARRANTY.

Some states do not allow limitations on how long an implied warranty lasts, so the above limitation may not apply to you. Some states do not allow the exclusion or limitation of incidental or consequential damages, so the above limitation or exclusion may not apply to you. This warranty gives you specific legal rights, and you may also have other rights, which vary from state to state.