OMEGALIFT™ EQUIPMENT

Ratchet Style Jack Stands

Model	Capacity per pair
32035B	3 Ton
32065B	6 Ton
32125B	12 Ton

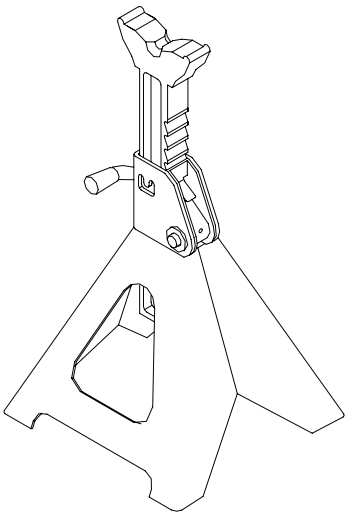

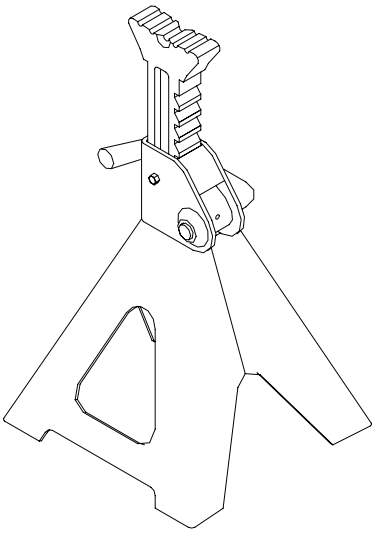

This is the safety alert symbol. It is used to alert you to potential personal injury hazards. Obey all safety messages that follow this symbol to avoid possible injury or death.

⚠WARNING

To avoid crushing and related injuries: NEVER work on, under or around a load supported only by a hydraulic jack. ALWAYS use a pair of adequately rated jack stands.

SFA Companies
10939 N. Pomona Ave. Kansas City, MO 64153
sales@omegalift.com

© Feb. 2018

32035B-M1_022018

SAFETY AND GENERAL INFORMATION

Save these instructions. For your safety, read, understand, and follow the information provided with and on this device before using. The owner and/or operator shall have an understanding of the device, its operating characteristics and safety operating instructions before operating the equipment. The owner and/or operator shall be aware that use and repair of this product may require special skills and knowledge. Instructions and safety information shall be read to and discussed with the operator in the operator's native language, making sure that the operator comprehends their contents, before use of this equipment is authorized. If any doubt exists as to the safe and proper use of this device, remove from service immediately.

Inspect before each use. Do not use if abnormal conditions such as cracked welds, damaged, loose or missing parts are noted. Any equipment that appears damaged in any way, is found to be worn, or operates abnormally shall be removed from service until repaired. If the equipment has been or is suspected to have been subjected to an abnormal load or shock, immediately discontinue use until inspected by a factory authorized repair facility (contact distributor or manufacturer for list of authorized repair facilities). It is recommended that an annual inspection be made by an authorized repair facility. Labels and Operator's Manuals are available from the manufacturer.

PRODUCT DESCRIPTION

Omega Heavy Duty Jack Stands are designed to support rated capacity, partial vehicle loads consisting of one end of a vehicle. Use as an identical pair to support one end of a vehicle only.

SPECIFICATIONS

Model	Capacity (per pair)	Base Size	Min. Height	Max. Height
32035B	3 Ton	7-3/4” x 6-3/4”	11-5/8”	17”
32065B	6 Ton	10-5/8” x 9-3/8”	15-1/2”	24-3/8"
32125B	12 Ton	12” x 10-7/8”	17-5/8”	27-1/2"

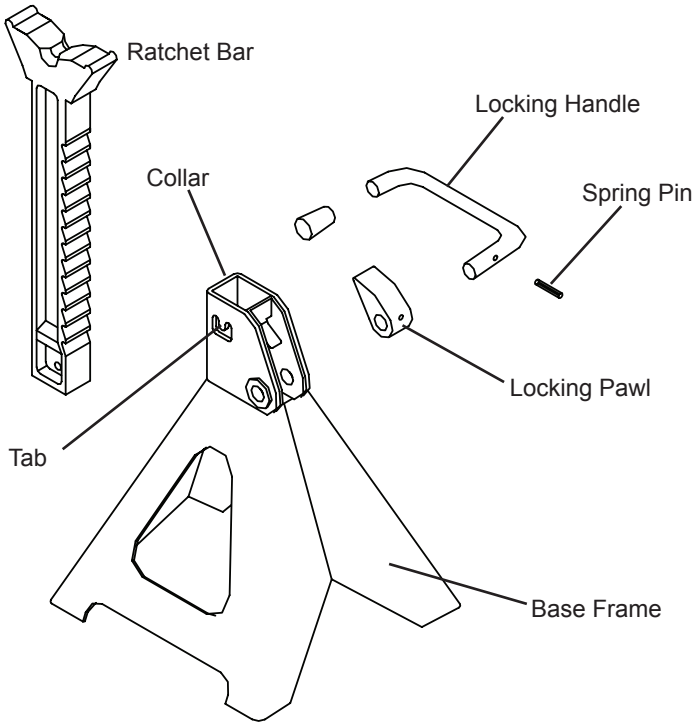

Figure 1 - Jack Stand Components

PREPARATION

Assembly *(ref. Figs. 1 & 2)*

1. Make sure all parts are present. If any part is missing or damaged, do not attempt to assemble or operate the product. Contact Omega Customer service (888) 332-6419.
2. Install ratchet bar into collar, ratchet portion of bar aligned with locking pawl.
3. Move the ratchet bar to its lowest position by raising the locking handle, releasing the locking pawl, and guiding the bar downward.
4. To prevent inadvertent loss of the ratchet bar:
   a) *For 32035B & 32065B:* (Tools required: Hammer, Punch) Press the collar tab inward using a suitable hammer and punch.

      For 32125B: (Tools required: Screw Driver) Insert the collar screw using a suitable screw driver.

⚠WARNING

- *Study, understand, and follow all instructions before operating this device.*
- *Do not exceed rated capacity.*
- *Use only on hard, level surface capable of supporting the load.*
- *Center load on saddle.*
- *Use as an identical pair only.*
- *Stands are not to be used to simultaneously support both ends of a vehicle.*
- *No alteration shall be made to this device.*
- *Failure to heed these markings may result in personal injury and/or property damage.*

Before Use

1. Read this manual completely and familiarize yourself thoroughly with the product and the hazards associated with its improper use before using the product.
2. Verify that the product and the application are compatible, if in doubt call Omega Customer Service (888) 332-6419.
3. Inspect jack stands before each use. Do not use if there are bent, broken or cracked components noted (including labels). Ensure that all parts move freely.
4. Consult the vehicle owners or service manual for location of proper lift and support points.

OPERATION

⚠ **WARNING:** *Support areas of vehicle specified by vehicle manufacturer. Use ONLY on vehicles whose support points are compatible with saddle of jack stand. Incompatibility may result in structural damage to vehicle and/or jack stand.*

1. Adjust height by pulling up on ratchet bar.
2. The weight of locking handle should secure the ratchet bar in desired position. To confirm, push down on the locking handle. Ensure ratchet and locking pawl are secure before loading.
3. Carefully position jack stands so that load is centered on stand's saddle.
4. Lower the vehicle onto the stands.
5. Ensure vehicle is secure before working on, around or under. Chock all unlifted wheels in both directions to prevent inadvertent movement.

Removing Jack Stands

⚠ **WARNING:** *Clear all tools and personnel before lowering load.*

1. With suitable jack, raise vehicle clear of stands.
2. Raise locking handle and allow ratchet bar to descend to lowest position.
3. Remove jack stands, then lower vehicle with lifting device.

MAINTENANCE

Periodically inspect each stand. Ensure all parts move freely. Do not apply oil or grease to any portion of this product. If rust appears, sand affected area and cover with suitable utility paint.

Storage

Store stands in upright position and in a clean, dry area.

REPLACEMENT PARTS

Individual replacement parts are not available for this product. Jack stands are sold as an identical pair. For product labels and owners manual, call or write: SFA Companies 10939 N. Pomona Ave. Kansas City, MO 64153, U.S.A. e-mail: sales@omegalift.com; Tel: (888) 332-6419 Fax: (816) 891-6599; Website: http://www.omegalift.com

ONE YEAR LIMITED WARRANTY

For a period of one (1) year from date of purchase, **SFA Companies** will repair or replace, at its option, without charge, any of its products, which fails due to a defect in material or workmanship under normal usage. This limited warranty is a consumer's exclusive remedy.

Performance of any obligation under this warranty may be obtained by returning the warranted product, freight prepaid, to **SFA Companies** Warranty Service Department, 10939 N. Pomona Ave., Kansas City, MO 64153.

Except where such limitations and exclusions are specifically prohibited by applicable law, (1) THE CONSUMER'S SOLE AND EXCLUSIVE REMEDY SHALL BE THE REPAIR OR REPLACEMENT OF DEFECTIVE PRODUCTS AS DESCRIBED ABOVE. (2) **SFA COMPANIES** SHALL NOT BE LIABLE FOR ANY CONSEQUENTIAL OR INCIDENTAL DAMAGE OR LOSS WHATSOEVER. (3) ANY IMPLIED WARRANTIES, INCLUDING WITHOUT LIMITATION THE IMPLIED WARRANTIES OF MERCHANTABILITY AND FITNESS FOR A PARTICULAR PURPOSE, SHALL BE LIMITED TO ONE YEAR, OTHERWISE THE REPAIR, REPLACEMENT OR REFUND AS PROVIDED UNDER THIS EXPRESS LIMITED WARRANTY IS THE EXCLUSIVE REMEDY OF THE CONSUMER, AND IS PROVIDED IN LIEU OF ALL OTHER WARRANTIES, EXPRESS OR IMPLIED. (4) ANY MODIFICATION, ALTERATION, ABUSE, UNAUTHORIZED SERVICE OR ORNAMENTAL DESIGN VOIDS THIS WARRANTY AND IS NOT COVERED BY THIS WARRANTY.

Some states do not allow limitations on how long an implied warranty lasts, so the above limitation may not apply to you. Some states do not allow the exclusion or limitation of incidental or consequential damages, so the above limitation or exclusion may not apply to you. This warranty gives you specific legal rights, and you may also have other rights, which vary from state to state.