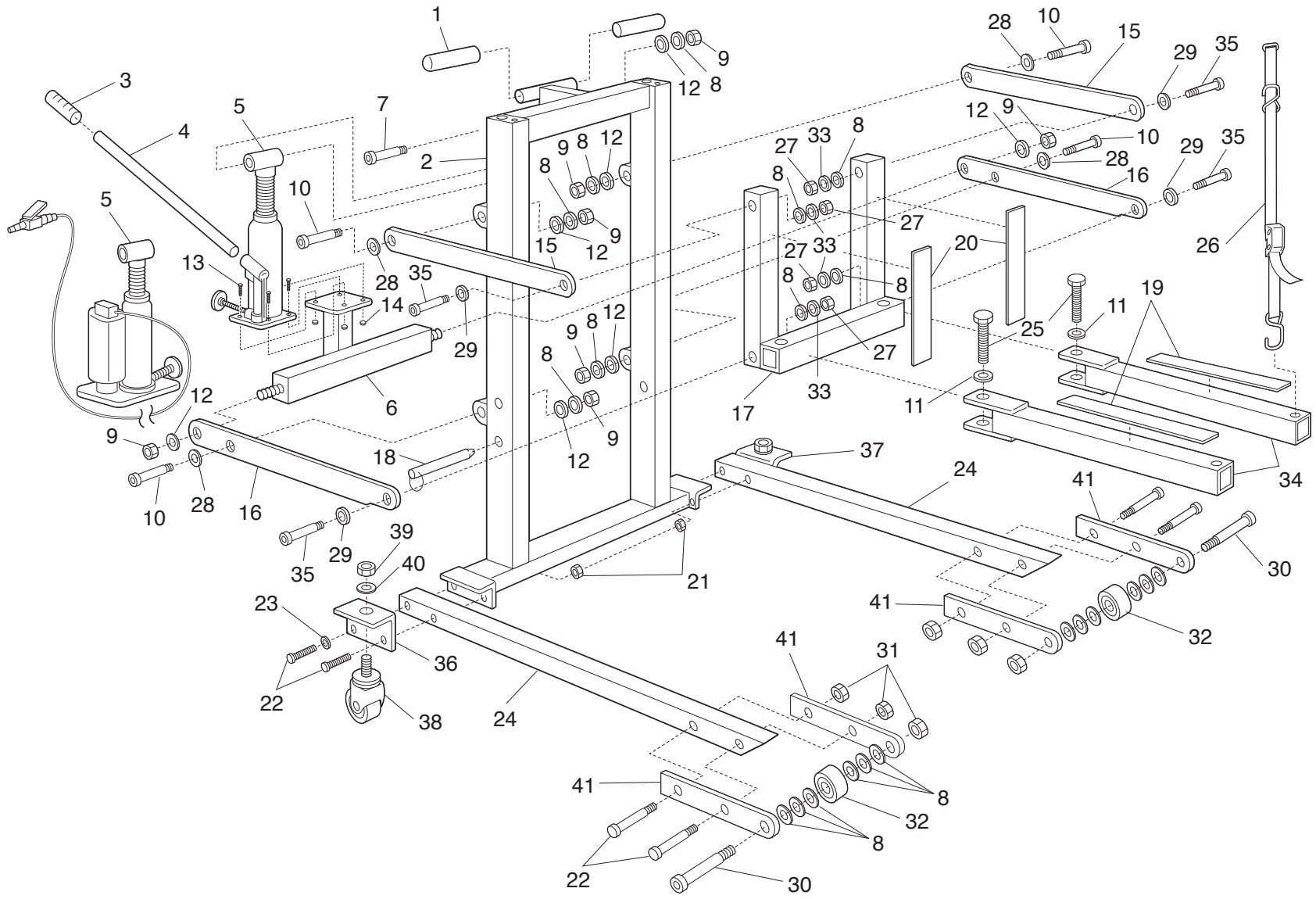

REPLACEMENT PARTS	MODEL NO.	CAPACITY	DESCRIPTION
	977/987	1000 LBS.	MOTORCYCLE LIFT

norco®

INDEX NO.	DESCRIPTION	PART NO.	REQ'D NO.
1	Hand Grip	479248	2
2	Upright Assembly	295110	1
3	Pump Handle Grip for Model #977	295052	1
3	Pump Handle Grip for Model #987	295119	1
4	Pump Handle for Model #977	295053	1
4	Pump Handle for Model #987	295121	1
5	Model 76505 Jack for Model #977	295050	1
5	Air/Hyd. Jack for Model #987	295120	1
6	Jack Base Assy. for Model #977	295125	1
6	Jack Base Assy. for Model #987	295130	1
7	5/8" Shoulder Bolt, 2" Long	11197	1
8	1/2" Flat Washer, Zinc Plated	2074	17
9	1/2" - 13 UNC Self Locking Nut	1113	7
10	5/8" Shoulder Bolt, 2 1/2" Long	11207	4
11	5/8" Hardened Washer	2132	2
12	5/8" Flat Washer	2130	7
13	1/4" - 20 UNC x 1" Allen Socket Cap Screw	3057	4
14	1/4" - 20 UNC Nyloc Hex. Nut	1053	4
15	Upper Guide Arm	295061	2
16	Lift Arm	295062	2
17	Lift Assembly	295115	1
18	Detent Pin	295054	1
19	15" Long Rubber Pad	295122	2
20	20" Long Rubber Pad	295078	2
21	3/8" - 16 UNC Nyloc Hex. Nut	1054	2
22	3/8" - 16 UNC x 3 1/4" Hx. Bolt, Gr. 5	11209	8
23	3/8" Split Medium Lockwasher	2007	2
24	Base Leg Assembly	295135	2
25	5/8" - 11 UNC x 3" Hx. Hd. Bolt, Gr. 5	11211	2
26	Tie Down Assembly	295097	4
27	3/8" - 16 UNC Self Locking Nut	1114	4
28	5/8" Thin Flat Washer	2131	4
29	1/2" Flat Washer, .025 Thick	2129	4
30	1/2" Shoulder Bolt, 2 3/4" Long	11206	2
31	3/8" - 16 UNC Jam Nut, Nyloc	1079	6
32	Front Wheel	295123	2
33	3/8" Flat Washer	2072	4
34	Support Arms	295124	2
35	1/2" Shoulder Bolt, 2 1/2" Long	11212	4
36	Caster Mounting Bracket (Rt.)	295108	1
37	Caster Mounting Bracket (Lt.)	295109	1
38	Caster Assembly	295126	2
39	Caster Nut	295127	2
40	Caster Washer	295128	2
41	Front Wheel Bracket	295114	4