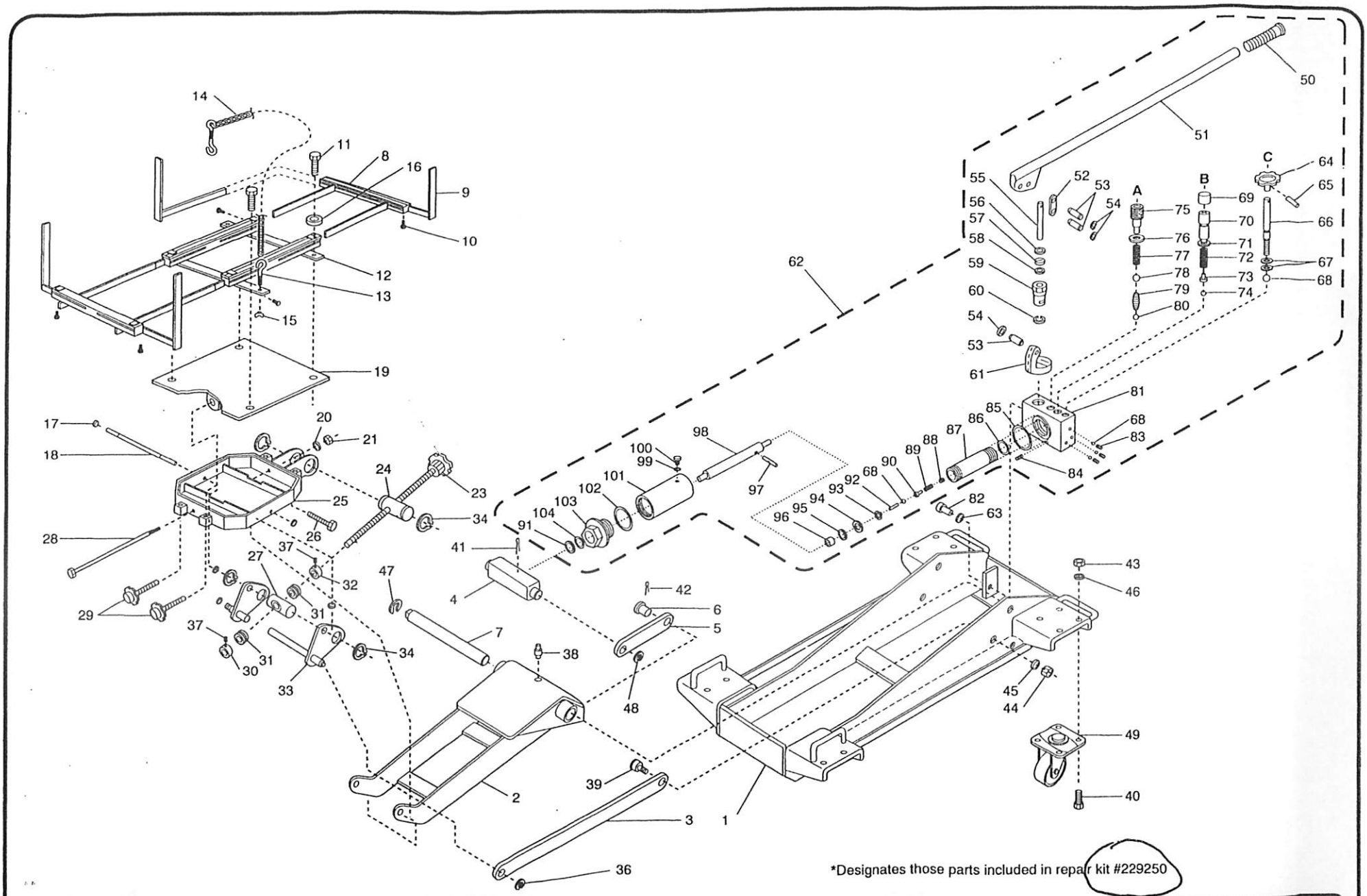

*Designates those parts included in repair kit #229250

REPLACEMENT PARTS	MODEL NO.	CAPACITY	DESCRIPTION
	72000C	1 1/2 TON	TRANSMISSION JACK

norco®

INDEX NO.	DESCRIPTION	PART NO.	QTY.
1	Frame assy.	229205	1
2	Lift arm assy.	229210	1
3	Guide arm	229227	2
4	Trunion	229223	1
5	Trunion arm	229224	2
6	Trunion arm rivet	229226	2
7	Pivot pin	229222	1
8	Fore/aft extension assy.	229049	2
9	Extension arm	229051	4
10	Lock screws	229052	6
11	Mounting bolts	229053	4
12	Universal adapter	229048	1
13	Eye bolt	229056	1
14	Chain with hook	229058	1
15	Wing nut	229057	1
16	Washer	2078	4
17	"E" retaining ring	12139	4
18	Fore/aft tilt pin	229026	1
19	Saddle base plate	229047	1
20	Washer	229061	1
21	Nut	229062	1
22	Knob	229068	1
23	Expansion pin	229069	1
24	Threaded trunion	229067	1
25	Saddle base assy.	229060	1
26	Rear side tilt screw	229066	2
27	Saddle trunion	229083	1
28	Pivot bolt	229059	1
29	Front side tilt screw	229064	2
30	Bearing container outside	229081	1
31	Bearing assy.	229085	2
32	Bearing container inside	229089	1
33	Saddle base clevis	229019	1
34	Retaining ring	12141	4
35	Fore/aft tilt screw	229071	1

INDEX NO.	DESCRIPTION	PART NO.	QTY.
36	Retaining ring	229077	2
37	Set screw	229084	2
38	Grease zerk fitting	209048	1
39	Guide arm screw	209052	2
40	Caster mounting bolt	209133	16
41	Cotter pin	209043	1
42	Cotter pin	209057	2
43	Caster mounting nut	209124	16
44	Nut	209129	2
45	Lockwasher	209126	2
46	Flat washer	2016	16
47	Retaining ring	209044	1
48	Trunion retaining ring	209056	2
49	Caster assy. complete	229713	4
50	Handle grip	229228	1
51	Handle	229229	1
52	Link	229231	2
53	Pin	229232	3
54	Retaining ring	229233	3
55	Pump piston	229234	1
*56	Oil seal	229236	1
*57	Backup ring	229237	1
*58	O-ring	229238	1
59	Pump housing	229239	1
*60	O-ring	229241	1
61	Swivel collar	229287	1
62	Complete hydraulic block assy.	229240	1
63	1/2" split medium lockwasher	2001	2
64	Release valve knob	229242	1
65	Expansion pin	229243	1
66	Release valve	229244	1
*67	O-ring	229246	2
*68	Checkball, 1/4" diameter	9004	5
69	Plastic cap	229247	1
70	Overload adjustment screw	229248	1

INDEX NO.	DESCRIPTION	PART NO.	QTY.
*71	O-ring	229249	1
72	Overload spring	229251	1
73	Overload spring guide	229252	1
*74	Checkball, 3/16" diameter	9007	1
75	Valve port screw	229253	1
*76	Valve port washer	229254	1
77	Valve port spring	229256	1
*78	Checkball, 11/32" diameter	9014	1
79	Valve port spring	229257	1
*80	Checkball, 7/32" diameter	9001	1
81	Hydraulic block	229258	1
82	Hx. hd. bolt 1/2" - 13 x 1", gr. 5	11104	2
83	Metric allen socket set screw	229259	3
84	Filter	229261	1
*85	O-ring	229262	1
*86	O-ring	229263	1
87	Cylinder	229264	1
88	Bypass screw	229266	1
89	Bypass spring	229267	1
90	Spring guide	229268	1
*91	Oil seal	229269	1
92	Valve pin	229271	1
93	Retaining ring	229272	1
*94	U-cup seal	229273	1
*95	Backup ring	229274	1
96	Ram bearing	229276	1
97	Bypass bar	229277	1
98	Ram	229278	1
*99	O-ring	229279	1
100	Reservoir fill plug	229281	1
101	Reservoir	229282	1
*102	O-ring	229283	1
103	Cylinder nut	229284	1
*104	O-ring	229286	1
	Repair kit	229250	

* = Designates those parts included in repair kit #229250