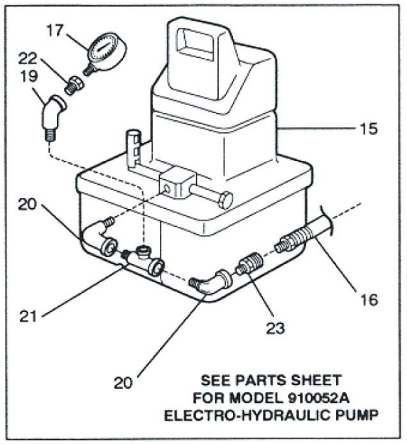

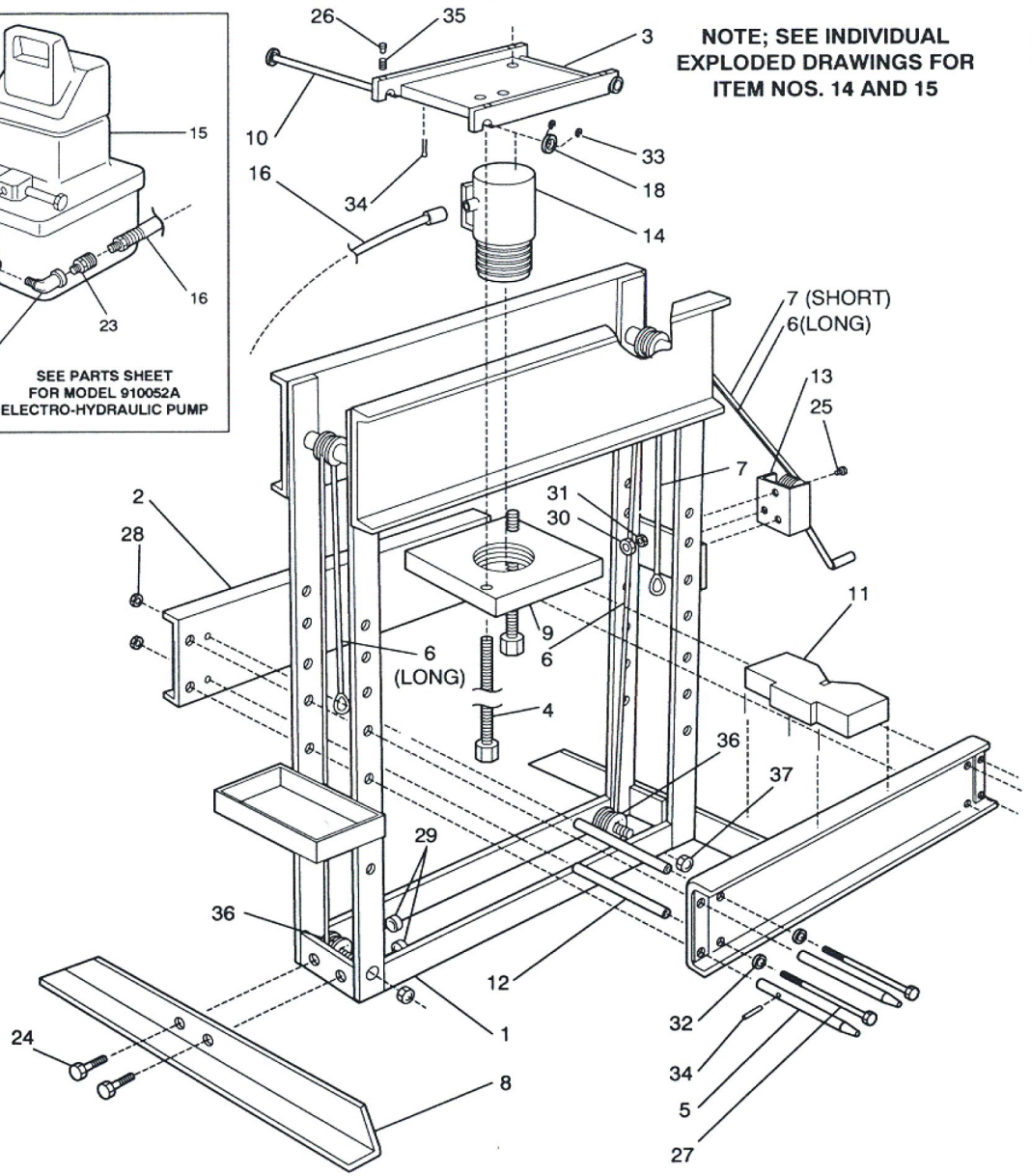

NOTE; SEE INDIVIDUAL EXPLODED DRAWINGS FOR ITEM NOS. 14 AND 15

INDEX NO.	DESCRIPTION	PART NO.	QTY.
1	Press frame assembly	411055	1
2	Bed channel assembly	411060	2
3	Bridge plate assembly	411105	1
4	Tie rod	411110	2
5	Bed locator assembly	411065	4
6	Cable assembly, long	411070	1
7	Cable assembly, short	411075	1
8	Base leg angle	411081	2
9	Cylinder mounting plate	411099	1
10	Bearing shaft	411098	2
11	Arbor plates, pair, optional equipment	78111A	1 pr
12	Spanner sleeve	411082	4
13	Winch	455095	1
14	Ram	999000	1
15	Pump, electrical	910052A	1
16	Hose	910035A	1
17	100 Ton Gauge	411120	1
18	Roller bearing (3/4" dia. shaft)	16007	4
19	Elbow , 45° - 3/8 NPT (M-F)	13017	1
20	Elbow , 90° - 3/8 NPT (M-F)	13016	2
21	Tee , 90° - 3/8 NPT (M-F-F)	13029	1
22	Reducer	13024	1
23	Swivel end adaptor 3/8 (M-F)	13013	1
24	Bolt - 3/4 - 10 x 2 1/4" long	11153	4
25	Bolt - 5/16 - 18 x 1 1/4" long hex head	11126	3
26	Set screw, cup point 3/8 - 16 x 1/2 long	3039	4
27	Bolt - 1 - 8 x 9 1/2 long, hex head	11055	4
28	Nut - 1 - 8 hex	1013	4
29	Nut 3/4 - 10 hex	1012	4
30	Nut 5/16 - 18 hex	1072	3
31	Flat washer 5/16	2073	3
32	Flat washer - 1"	2080	4
33	Retainer ring, truarc	12201	8
34	Expansion pin - 1/4" dia. x 2' long	7052	6
35	Spring	455103	4
36	Pulley Norco#	411079	2
37	3/8 - 16 nylock nut hex	1054	1

REPLACEMENT PARTS	MODEL NO.	CAPACITY	DESCRIPTION
	78110B	100 TON	100 TON PRESS

norco®