Operating Instructions • Warning Information • Parts Breakdown

RL80A

Gravity Feed Spray Gun and Cup

SPECIFICATIONS	
Fluid Orifice	1.3mm
Air Inlet:	1/4 NPT
Rec. Max. Inlet Pressure:	60 PSI
CFM:	10.1 at 43 PSI
Nozzle Pressure	47 PSI

Rev. 03/20/03

WARNING - FOLLOW THESE RULES FOR SAFE OPERATION!

- During cleaning and flushing, solvents can be forcefully expelled from fluid and air passages. Some solvents can cause eye injury.
- Be sure all others in the area are wearing impact-resistant eye and face protection.
- Even small projectiles can injure eyes and cause blindness.
- Air under pressure can cause severe injury. Always shut off air supply, drain hose of air pressure and disconnect tool from air supply when not in use, before changing accessories or when making repairs. Never direct air at yourself or anyone else. Whipping hoses can cause serious injury. Always check for damaged or loose hoses and fittings. Never use quick change couplings at tool. They add weight and could fail due to vibration. Instead, add a hose whip and connect coupling between air supply, and hose whip, or between hose whip and leader hose. Do not exceed maximum air pressure of 43 PSI.

- Always use tool a safe distance from other people in work area.
- Maintain tools with care. Keep tools clean and oiled for best and safest performance. Follow instructions for lubricating and changing accessories. Wiping or cleaning rags and other flammable waste materials must be placed in a tightly closed metal container and disposed of later in the proper fashion.
- Do not wear loose or ill-fitting clothing, remove watches and rings.

- Don’t over reach. Keep proper footing and balance at all times. Slipping, Tripping and Falling can be a major cause of serious injury or death. Be aware of excess hose left on the walking or work surface.
- Don’t force tool. It will do the job better and safer at the rate for which it was designed.
- Don’t abuse hoses or connectors. Never carry tool by the hose or yank it to disconnect from power supply. Keep hoses from heat, oil and sharp edges. Check hoses for weak or worn condition before each use, making certain that all connections are secure.

- High sound levels can cause permanent hearing loss. Protect yourself from noise. Noise levels vary with work surface. Wear ear protectors.
- When possible, secure work with clamps or vise so both hands are free to operate tool.
- Repetitive work motions, awkward positions and exposure to vibration can be harmful to hands and arms.
- Avoid inhaling dust or handling debris from work processes which can be harmful to your health.
- Operators and maintenance personnel must be physically able to handle the bulk, weight and power of this tool.
- This tool is not intended for using in explosive atmospheres and is not insulated for contact with electric power sources.

- Solvent and coatings can be highly flammable or combustible especially when sprayed. Adequate exhaust must be provided to keep air free of accumulations of flammable vapors.
- Smoking must never be allowed in the spray area.
- Fire extinguishing equipment must be present in the spray area.
- Never spray near sources of ignition such as pilot lights, welders, etc.
- Halogenated hydrocarbon solvents — for example; methylene chloride, are not chemically compatible with the aluminum that might be used in many system components. The chemical reaction caused by these solvents reacting with aluminum can become violent and lead to an equipment explosion. Guns with stainless steel fluid passages may be used with these solvents. However, aluminum is widely used in other spray application equipment - such as material pumps, cups and regulators, valves, etc. Check all other equipment items before use and make sure they can also be used safely with these solvents. Read the label or data sheet for the material you intend to spray. If in doubt as to whether or not a coating or cleaning material is compatible, contact your material supplier.
- Sprayed materials may be harmful if inhaled, or if there is contact with the skin. Adequate exhaust must be provided to keep the air free of accumulations of toxic materials. Use a mask or respirator whenever there is a chance of inhaling sprayed materials. The mask must be compatible with the material being sprayed and its concentration.

AIR SUPPLY

Air Flow CFM	Length of Pipe (ft.)			
	50	100	150	200
10	1/2"	3/4"	3/4"	
20	3/4"	3/4"	3/4"	3/4"
30	3/4"	3/4"	1"	1"
40	1"	1"	1"	1"
50	1"	1"	1"	1"
70	1"	1"	1-1/4"	1-1/4"

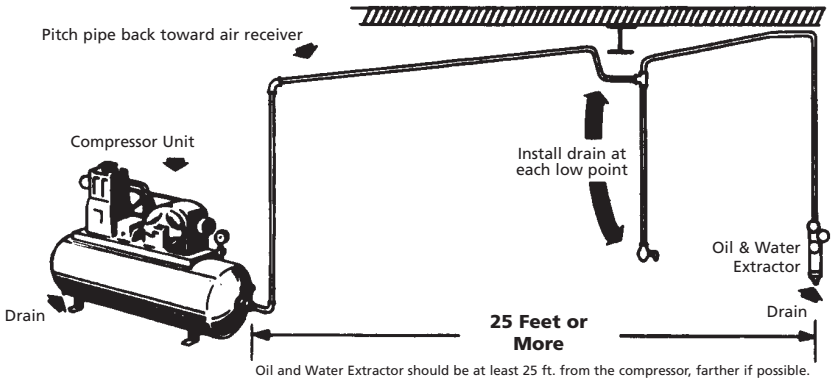

Never mount oil and water extractor on or near the air compressor.
During compression, air temperature is greatly increased. As the air cools down to room temperature, moisture condenses in the air line, on its way to the spray gun. Therefore, always mount the oil and water extractor at a point in the air supply system where the compressed air temperature is lowest.

Drain air lines properly.
Pitch all air lines back towards the compressor so that condensed moisture will flow back into the air receiver where it can be drained off. Each low point in an air line acts as a water trap. Such points should be fitted with an easily accessible drain. See diagram above.

INSTALLATION

This spray gun is rugged in construction, and is built to yield exceptional value. The life of this product and the efficiency of its operation depend upon a knowledge of its construction, use and maintenance.

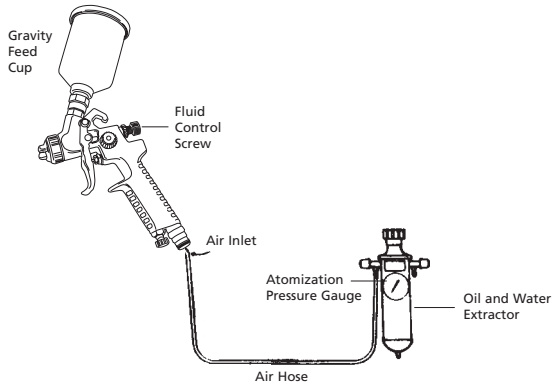

GRAVITY FEED CUP HOOKUP
Air pressure for atomization is regulated at extractor. Amount of fluid is adjusted by fluid control screw on gun, viscosity of paint, and air pressure.

FOR BEST PERFORMANCE, PLEASE BE SURE TO DO THE FOLLOWING BEFORE USING THIS TOOL

- Tighten the gun to the cup securely with the nut and fitting supplied.
- Be sure to have the proper air pressure at the gun to operate. Proper air pressure for this tool should be 35 PSI for lacquer and 43 PSI for enamel.
- Adjust fluid control screw and spray width adjustment screw to your desired pattern before using on production.
- Clean all parts after use.

ADJUSTMENTS

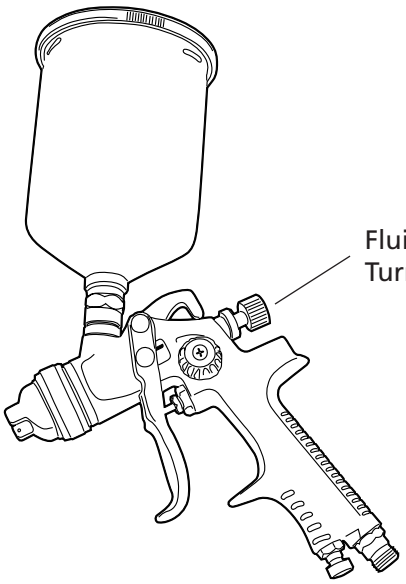

Fluid control screw
Turn right to decrease flow, left to increase.

SPRAYING

In normal use, the nozzle wings are horizontal as shown here. This provides a vertical fan-shaped pattern which gives maximum, even, material coverage as the gun is moved back and forth parallel to the surface being finished.

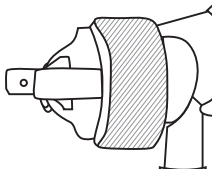

Set atomization pressure at no more than 43 PSI. For optimum performance, some materials may spray better at PSI ratings below 43. If unsure, always test at PSI ratings before using on final production. Try spray. If it is too fine, decrease the air pressure or open fluid control screw. If the spray is too thick, close the fluid control screw. Regulate the pattern width and repeat adjustment of spray as needed.

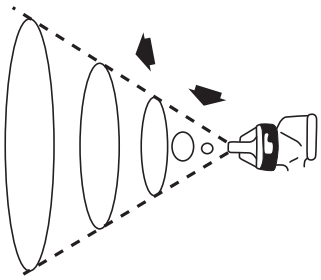

Spray pattern may be infinitely adjusted from round to flat.

OPERATION

Proper handling of the gun is essential for obtaining a good finish. The gun should be held at a right angle to the surface being covered, and moved parallel with it. For precise control of the gun and material, the trigger should be released before the end of the stroke.

Hold the gun from 6 to 12 inches away from the surface depending on material and atomizing pressure. For a uniform finish, lap each stroke over the preceding stroke, making sure the spray is smooth and wet.

Using the lowest possible atomizing air pressure will reduce overspray and provide maximum efficiency.

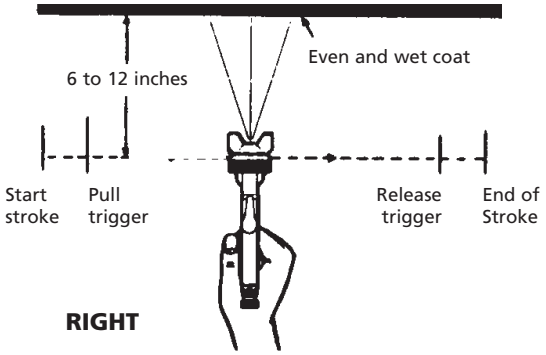

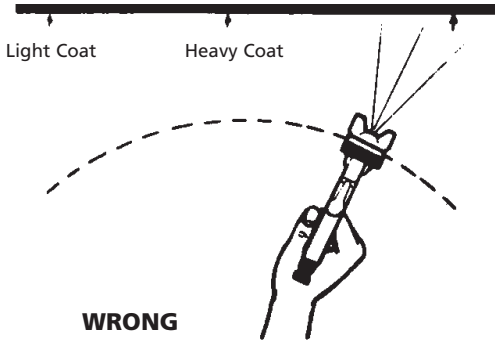

CLEANING & MAINTENANCE

SPRAY GUN

1. Submerge the front end of the gun in solvent just until the fluid connection is covered.
2. Paint that has built up on the gun should be removed using a bristle brush and solvent.
3. Never submerge all of the spray gun in solvent because:
   - This will dissolve the lubricant in the leather packings and on wear surfaces, causing them to dry out and resulting in difficult operation and faster wear.
   - Air passages in the gun will become clogged with dirty solvent.
4. Using a rag moistened with solvent, wipe down the outside of the gun.
5. Oil gun daily. Use a drop of lightweight machine oil on:
   A. fluid needle packing
   B. air valve packing
   C. trigger pivot point

See Fig. 1 for Location of Above Points.

6. Caution: Do not use lubricants which contain silicone. Silicone may cause defects in the finish application.

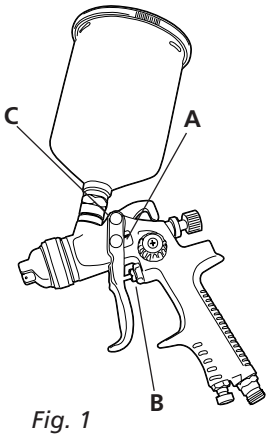

Fig. 1

AIR NOZZLE, FLUID NOZZLE, AIR VALVE ASSEMBLY

1. All nozzles and needles are made to exact standards. They should be handled carefully.
2. To clean nozzles, immerse them in solvent until any dried material is dissolved, then blow them clean.
3. Do not use metal or sharp instrument to probe any of the holes in the nozzles.
4. Air flow should occur before fluid-flow when the gun is triggered. It may be necessary to adjust the fluid control screw to make sure air flows before fluid.
5. Do not alter the gun in any way.

GRAVITY FEED

Turn off air supply. Remove cover of cup. Empty the cup of material. Clean the cup and cover. Add some cleaning solvent to cup. Replace cup cover. Turn on air supply and spray with proper cleaning solvent. Repeat with clean solvent if necessary. Remove solvent, disconnect gun, remove cup cover and clean. Wipe gun and cup with rag dampened with solvent.

CAUTION…

To avoid cross-threading, all spray gun parts should be screwed in hand tight initially. If the parts can not easily be turned by hand , be sure you have the correct parts, unscrew, realign, and try again. NEVER use excessive force in matching parts.

TROUBLESHOOTING

SPRAY PATTERN/ CONDITION	PROBLEM	SOLUTION
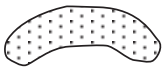	One side of nozzle wing is clogged.	Soak nozzle in solvent to loosen clog, then blow air through until clean. To clean orifices use a broom straw or toothpick. Never try and detach dried material with sharp tool.
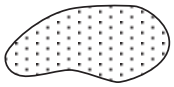	A.) Loose air nozzle. B.) Material around outside of air nozzle has dried.	A.) Tighten air nozzle. B.) Take off air nozzle and wipe off fluid tip, using rag moistened with thinner.
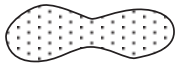	A.) Atomization air pressure is set too high. B.) Trying to spray a thin material in too wide a pattern.	A.) Reduce air pressure. B.) Increase material control by turning fluid control screw to left, while reducing spray width by turning spray width adjustment screw to right.
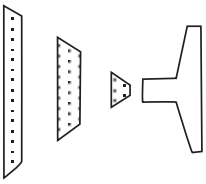 Spitting	A.) Packing around needle valve is dried out. B. Fluid nozzle loosely installed, or dirt between nozzle and body. C.) Loose or defective swivel nut on siphon cup.	A.) Back up knurled nut, put a few drops of machine oil on packing, re-tighten nut. B.) Take off fluid nozzle, clean rear of nozzle and seat in gun body. Replace nozzle and bring in tight to body. C.) Tighten or change out swivel nut.
Improper spray pattern.	A.) Gun improperly adjusted. B.) Dirty air cap. C.) Fluid tip obstructed. D.) Sluggish needle.	A.) Readjust gun. Follow instructions carefully. B.) Clean air cap. C.) Clean. D.) Lubricate.
Unable to get round spray.	Fan adjustment screw not seating properly.	Clean or replace.
Will not spray.	A.) No air pressure at gun. B.) Fluid pressure too low with internal mix cap and pressure tank. C.) Fluid control screw not open enough. D.) Fluid too heavy for suction feed.	A.) Check air supply and air lines. B.) Increase fluid pressure at tank. C.) Open fluid control screw. D.) Thin material or change to pressure feed.
Fluid leakage from packing nut.	A.) Packing nut loose. B.) Packing worn or dry.	A.) Tighten, but not so tight as to grip needle. B.) Replace packing or lubricate.
Dripping from fluid tip.	A.) Dry packing. B.) Sluggish needle. C.) Tight packing nut. D.) Worn fluid nozzle or needle.	A.) Lubricate. B.) Lubricate. C.) Adjust. D.) For pressure feed, replace with new fluid nozzle and needle.
Thin, sandy coarse finish.	A.) Gun held too far from surface. B.) Atomization pressure set too high.	A.) Move gun closer to surface. B.) Adjust atomization pressure.
Thick, dimpled finish resembling orange peel.	Gun held too close to surface.	Move gun further from surface.

PARTS BREAKDOWN - RL80A

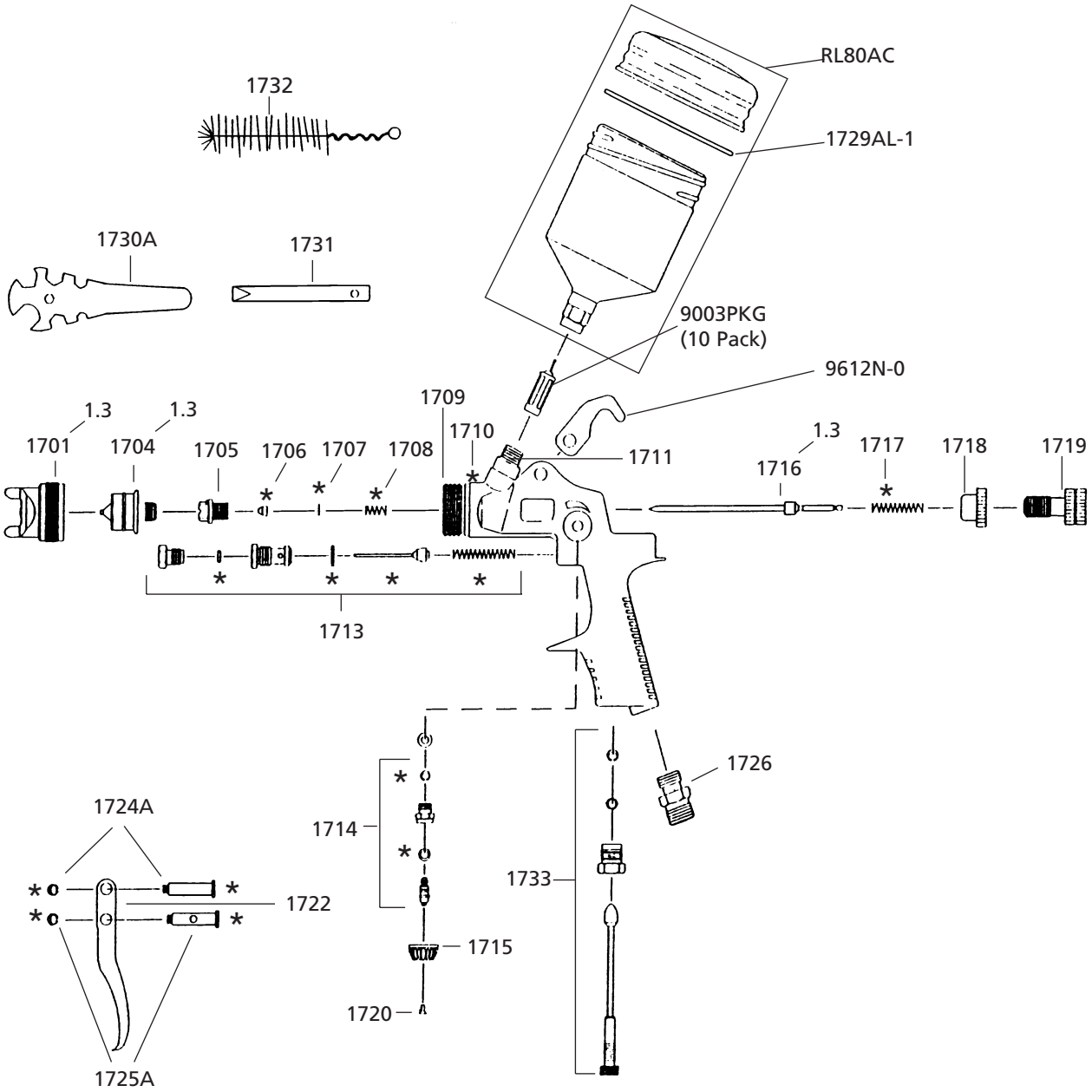

1700RK Includes all parts as asterisked on parts diagram

Optional Nozzle Kits Available:

#9004-1.3 - 1.3mm

*9004-1.4 - 1.4mm

#9004-1.7 - 1.7mm

#9004-2.0 - 2.0mm

Nozzle Kits consist of:

1 Air Cap

1 Fluid Needle

1 Fluid Nozzle

NOTE: Brass Baffle has left handed threads.

PARTS LIST - RL80A

ITEM NO.	DESCRIPTION
RS1700RK	Repair Kit*
RS1701-1.3	Air Nozzle 1.3MM (Standard)
RS1704-1.3	Fluid Nozzle 1.3MM (Standard)
RS1705	Packing Screw
RS1706	Teflon Seal
RS1707	Washer
RS1708	Spring
RS1709	Brass Baffle (Left-Hand Thread)
RS1710	Gasket
RS1711	Connector
RS1713	Air Valve Assembly
RS1714	Fan Adjustment
RS1715	Control Knob
RS1716-1.3	Paint Needle 1.3MM (Standard)
RS1717	Spring
RS1718	Lock for Fluid Control Knob
RS1719	Fluid Control Knob
RS1720	Screw
RS1722	Trigger
RS1724A	Screw & Nut
RS1725A	Pin & Clip
RS1726	Air Connection
RS1730A	Spanner
RS1731	Socket Spanner
RS1732	Brush
RS1733	Air Adjusting Valve Assembly
RS9003PKG	Material Filter (10 Pack)
RS9612N-0	Hanger
RL80C	Replacement Aluminum Cup and Lid
RS1729AL-1	Gasket for Aluminum Lid

*Includes all parts as asterisked on parts diagram.

WARRANTY

Matco warrants its air tools for a period of 1 year to the consumer. We will repair any air tool covered under this warranty which proves to be defective in material or workmanship during the warranty period. In order to have your tool repaired, return the tool to any Matco Authorized Warranty Center, freight prepaid. Please include a copy of your proof of purchase and a brief description of the problem. The tool will be inspected and if any part or parts are found to be defective in material or workmanship, they will be repaired free of charge and the repaired tool will be returned to you freight prepaid.

This warranty gives you specific rights. You may also have other rights which vary from state to state.

The foregoing obligation is Matco's sole liability under this or any implied warranty and under no circumstances shall Matco be liable for any incidental or consequential damages.

Note: Some states do not allow the exclusion or limitation of incidental or consequential damages so the above limitation or exclusion may not apply to you.