MB155UC
Ultimate Cart

ASSEMBLY INSTRUCTIONS

Step 1 Place the Locking Top and Drawer Unit (#1) on its back. Carefully open the Locking Top and lay it back against the ground.

Step 2 Slide chrome legs (#2) into square holes in corners of Locking Top (#1) until bolt holes are aligned at top of legs.

Step 3 Determine on which side of the cart the side push handle (#17) will be mounted. Then, insert two long bolts (#7) with two flat washers (#10) into the aligned holes in handle, locking top and legs. Fasten nuts (#9) using flat washers (#10) and lock washers (#12). Repeat this procedure for other corners using short bolts (#8).

Step 4 Slide bottom tray (#16) onto legs and fasten as in Step 3.

Step 5 Mounting casters: Put the four casters in place. The two locking casters (Part #3) should be on one side of the cart (recommend same side as push handle) and the two non locking casters (Part #4) should be on the other **(Left or right side NOT front or Back).** Using the 16 bolts, 32 washers, and 16 fasteners (located in Casters Hardware Kit, Part #5) completely tighten the casters to the bottom tray using a 13mm socket and 14mm combination wrench for the bolt head. (Note: Bolt head and one washer should be on the inside of the bottom shelf, nylock nut and one washer will be on the caster side.)

Step 6 Return cart to upright position.

Step 7 Using the screws (#11) provided, install drawer handles by aligning pre-drilled holes in drawers with slots in handle. Tighten all screws securely.

PARTS LIST

Item No.	Part No.	No. Req'd	Description
1	MB155UCLID	1	Lid (Red)
	MB155UCLID-BK		Lid (Black)
	MB155UCLID-BL		Lid (Blue)
	MB155UCLID-YE		Lid (Yellow)
	MB155UCLID-NG		Lid (Neon Green)
	MB155UCLID-OR		Lid (Orange)
	MB155UCLID-GR		Lid (Green)
	MB155UCLID-PP		Lid (Purple)
2	RS155LG	2	Extra Long Chrome Leg/ea.
3	RS155LC	2	Locking Casters/ea.
4	RS155NLC	2	Non-Locking Casters/ea.
5	RS155CHK	1	Caster Hardware Kit (Inc. 16 M8X16 bolts, 32 washers, & 16 fasteners).
6	RS150UCBK	1	Bolt Kit (Incl. #7, 8, 9, 10, 11, 12)
13	MBD150UCB-1	1	2-1/4" Replacement Drawer #1 (Red)
	MBD150UCB-1BK		2-1/4" Replacement Drawer #1 (Black)
	MBD150UCB-1BL		2-1/4" Replacement Drawer #1 (Blue)
	MBD150UCB-1YE		2-1/4" Replacement Drawer #1 (Yellow)
	MBD150UCB-1NG		2-1/4" Replacement Drawer #1 (Neon Green)
	MBD150UCB-1OR		2-1/4" Replacement Drawer #1 (Orange)
	MBD150UCB-1GR		2-1/4" Replacement Drawer #1 (Green)
	MBD150UCB-1PP		2-1/4" Replacement Drawer #1 (Purple)
14	MBD150UCB-2	1	3" Replacement Drawer #2 (Red)
	MBD150UCB-2BK		3" Replacement Drawer #2 (Black)
	MBD150UCB-2BL		3" Replacement Drawer #2 (Blue)
	MBD150UCB-2YE		3" Replacement Drawer #2 (Yellow)
	MBD150UCB-2NG		3" Replacement Drawer #2 (Neon Green)
	MBD150UCB-2OR		3" Replacement Drawer #2 (Orange)
	MBD150UCB-2GR		3" Replacement Drawer #2 (Green)
	MBD150UCB-2PP		3" Replacement Drawer #2 (Purple)
15	MBD150UCB-3	1	4-1/2" Replacement Drawer #3 (Red)
	MBD150UCB-3BK		4-1/2" Replacement Drawer #3 (Black)
	MBD150UCB-3BL		4-1/2" Replacement Drawer #3 (Blue)
	MBD150UCB-3YE		4-1/2" Replacement Drawer #3 (Yellow)
	MBD150UCB-3NG		4-1/2" Replacement Drawer #3 (Neon Green)
	MBD150UCB-3OR		4-1/2" Replacement Drawer #3 (Orange)
	MBD150UCB-3GR		4-1/2" Replacement Drawer #3 (Green)
	MBD150UCB-3PP		4-1/2" Replacement Drawer #3 (Purple)

Tools Needed for Assembly:

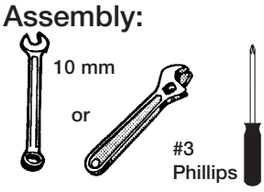

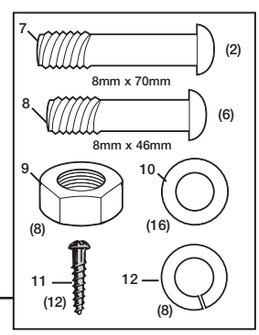

Bolt Kit (#6) included for attaching legs and tray to MB155UC cart:

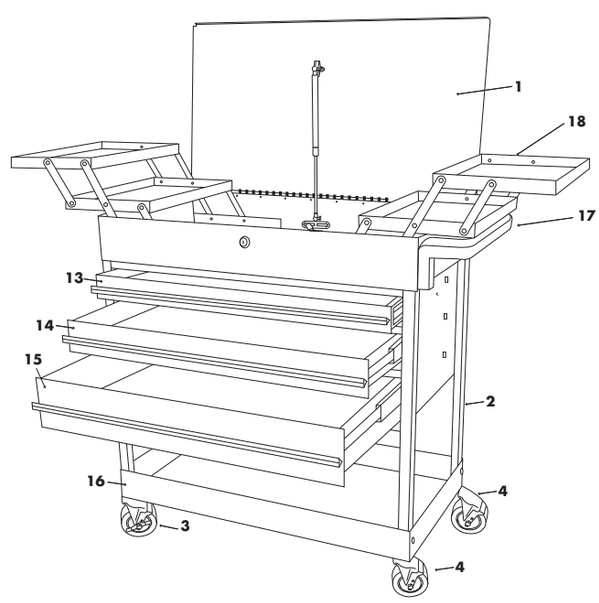

Bolt on casters replaced stem style casters in July 2006. If your MB155UC has stem style casters contact Mac customer service for caster and bottom shelf part numbers.

Copyright © Professional Tool Products, 2006
All rights reserved.

Item No.	Part No.	No. Req'd	Description
16	MBS155UC	1	Replacement Tray (Red)
	MBS155UC-BK		Replacement Tray (Black)
	MBS155UC-BL		Replacement Tray (Blue)
	MBS155UC-YE		Replacement Tray (Yellow)
	MBS155UC-NG		Replacement Tray (Neon Green)
	MBS155UC-OR		Replacement Tray (Orange)
	MBS155UC-GR		Replacement Tray (Green)
	MBS155UC-PP		Replacement Tray (Purple)
17	RS150UCSHDL		Side Push Handle
18	RS150UCTA	2	Cantilever Tray Assembly (Red)
	RS150UCTA-BK		Cantilever Tray Assembly (Black)
	RS150UCTA-BL		Cantilever Tray Assembly (Blue)
	RS150UCTA-YE		Cantilever Tray Assembly (Yellow)
	RS150UCTA-NG		Cantilever Tray Assembly (Neon Green)
	RS150UCTA-OR		Cantilever Tray Assembly (Orange)
	RS150UCTA-GR		Cantilever Tray Assembly (Green)
	RS150UCTA-PP		Cantilever Tray Assembly (Purple)

Also Available:

RS8006HDL	Chrome Drawer Handle
RS8006HDLB	Black Drawer Handle
RS8008LK	Lock with Two Keys
RSRBSLIDEC2	Clip-On Roller Bearing Slides (One Pair)
RS155GP	Gas Shock
RSLMMCBK	Locking Mechanism Excluding Lock (Black)
RSLMMCBL	Locking Mechanism Excluding Lock (Blue)
RSLMMCGR	Locking Mechanism Excluding Lock (Green)
RSLMMCNG	Locking Mechanism Excluding Lock (Neon Green)
RSLMMCOR	Locking Mechanism Excluding Lock (Orange)
RSLMMCPP	Locking Mechanism Excluding Lock (Purple)
RSLMMCR	Locking Mechanism Excluding Lock (Red)
RSLMMCYE	Locking Mechanism Excluding Lock (Yellow)