MARQUETTE®
Professional Lifting

1 TON TRANSMISSION JACK
MODEL: W93728

ASSEMBLY INSTRUCTIONS / SERVICE PARTS SHEET

ASSEMBLY INSTRUCTIONS

1. ASSEMBLE THE FRAME BASE TO THE HYD. UNIT BASE USING (4) 3/8-16 X 1" BOLTS AND (4) 3/8" ID LOCKWASHERS.

2. ALIGN THE BRACES TO THE FRAME BASE SO THAT THEY ENCIRCLE THE TOP OF THE HYD. UNIT AS SHOWN. (NOTE: THE BRACES ARE DIFFERANT LENGTHS. THE SMALLER/SHORTER BRACE SHOULD FACE AWAY FROM THE FOOT PEDAL) CONNECT THE COLLAR PORTION OF THE BRACES TO THE HYD. UNIT USING (2) 5/16-18 BOLTS, (2) 5/16" ID LOCK-WASHERS, AND (2) 5/16-18 NUTS LOOSELY.

3. ASSEMBLE THE CASTERS ONTO THE FRAME. ALIGN THE BOLTS THROUGH THE BRACES AND FRAME TO CONNECT TO THE CASTER. THE HARDWARE NEEDED WILL BE (4) 1/4-20 NUTS, (4) 1/4" ID LOCK WASHERS, AND (4) 1/4-20 BOLTS.

4. TIGHTEN ALL HARDWARE.

5. PLACE THE SADDLE ASSEMBLY POST INTO THE HYD. RAM. USING A 1/4" X 2" SPRING PIN SECURE THE SADDLE IN PLACE.

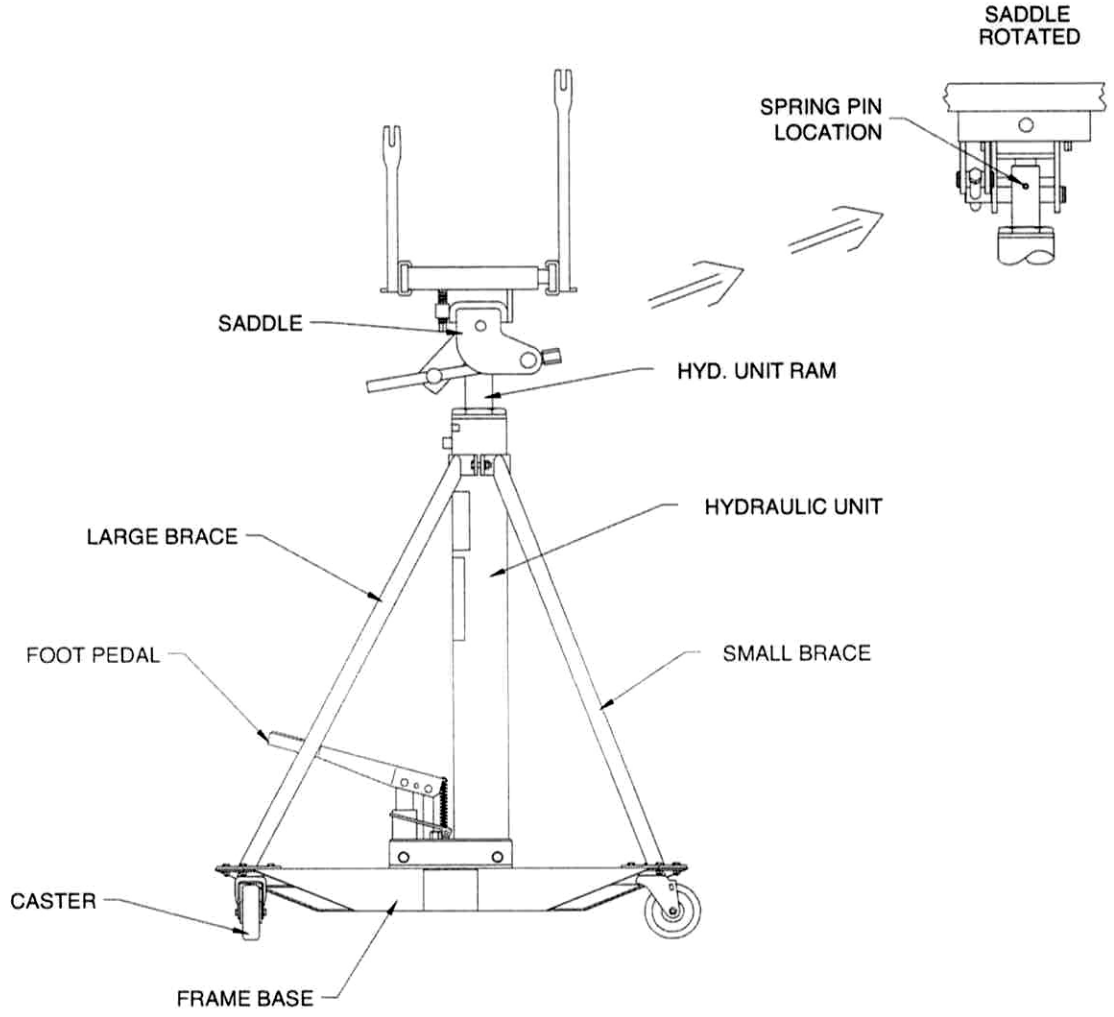

Clore Automotive
8600 NE Underground Drive, Pillar 248
Kansas City, Missouri 64161
Customer Service: 1-800-328-2921 *Revision A*

845-000-166

W93728

PART NUMBER	DESCRIPTION	INCLUDES
137-001-053	HEAD ASSEMBLY	ALL ITEMS MARKED #1 (ASSEMBLED)
137-001-054	CHAIN ASSEMBLY	CHAIN AND MOUNTING HARDWARE (NOT SHOWN)
137-001-055	HYD. UNIT REBUILD KIT	ALL ITEMS MARKED #2 (does not include cartridge)
137-001-056	PEDAL/SPRING KIT	ALL ITEMS MARKED #3
137-001-057	CASTER KIT	(1) CASTER AND MTG HARDWARE (NOT SHOWN)
137-001-058	LONG FORK ADAPTER KIT	ALL ITEMS MARKED #4
137-001-059	SHORT FORK ADAPTER KIT	ALL ITEMS MARKED #5
137-001-060	ANGLE BRKT ADAPTER KIT	ALL ITEMS MARKED #6

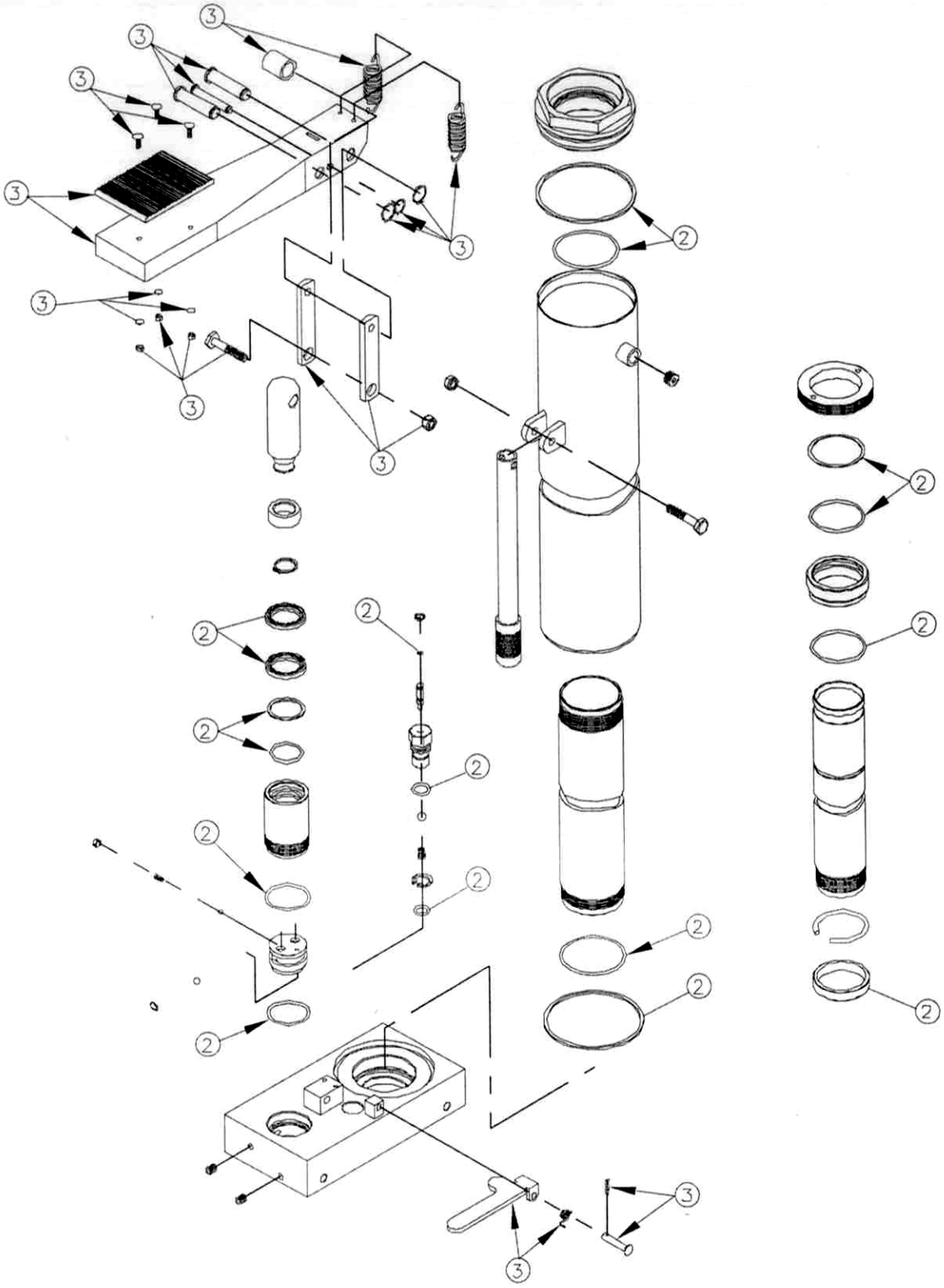
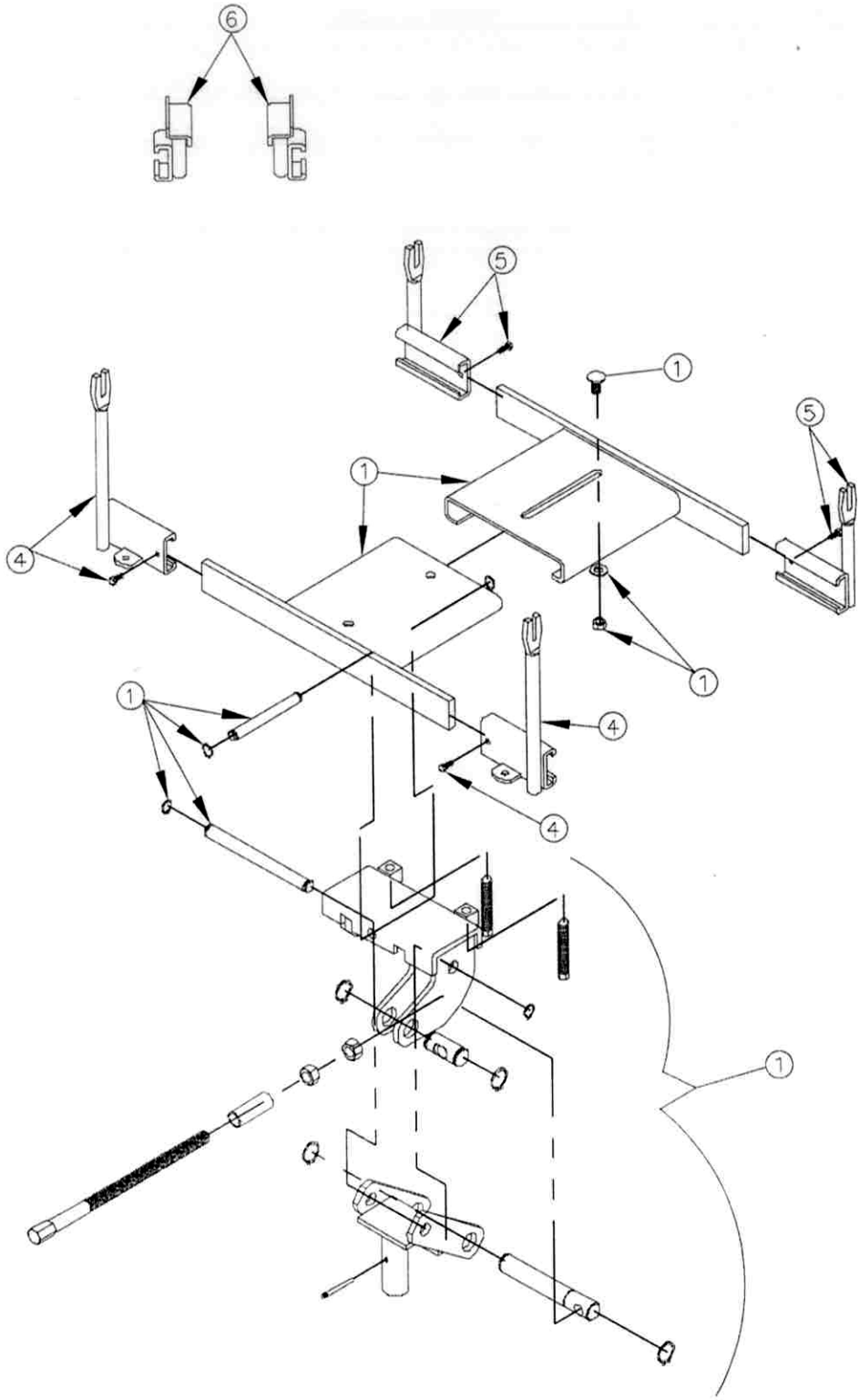
W93728