⚠ WARNING

EUROPEAN USERS

400V 50Hz SUPPLY DETAILS ARE INCLUDED WITH ELECTRICAL CONTROL BOX. DISREGARD SUPPLY WIRING DETAILS IN THIS MANUAL

IMPORTANT SAFETY INSTRUCTIONS
SAVE THESE INSTRUCTIONS

PLEASE READ THE ENTIRE CONTENTS OF THIS MANUAL PRIOR TO INSTALLATION AND OPERATION. BY PROCEEDING WITH LIFT INSTALLATION AND OPERATION YOU AGREE THAT YOU FULLY UNDERSTAND AND COMPREHEND THE FULL CONTENTS OF THIS MANUAL. FORWARD THIS MANUAL TO ALL OPERATORS. FAILURE TO OPERATE THIS EQUIPMENT AS DIRECTED MAY CAUSE INJURY OR DEATH.

Manual Revision H7 - January 2021
Manual Part Number 5900160

INSTALLATION AND OPERATION MANUAL

SUPER-DUTY FOUR-POST LIFTS

Models:
HDS-18E
HDS-27 / HDS-27X
HDS-40 / HDS-40X

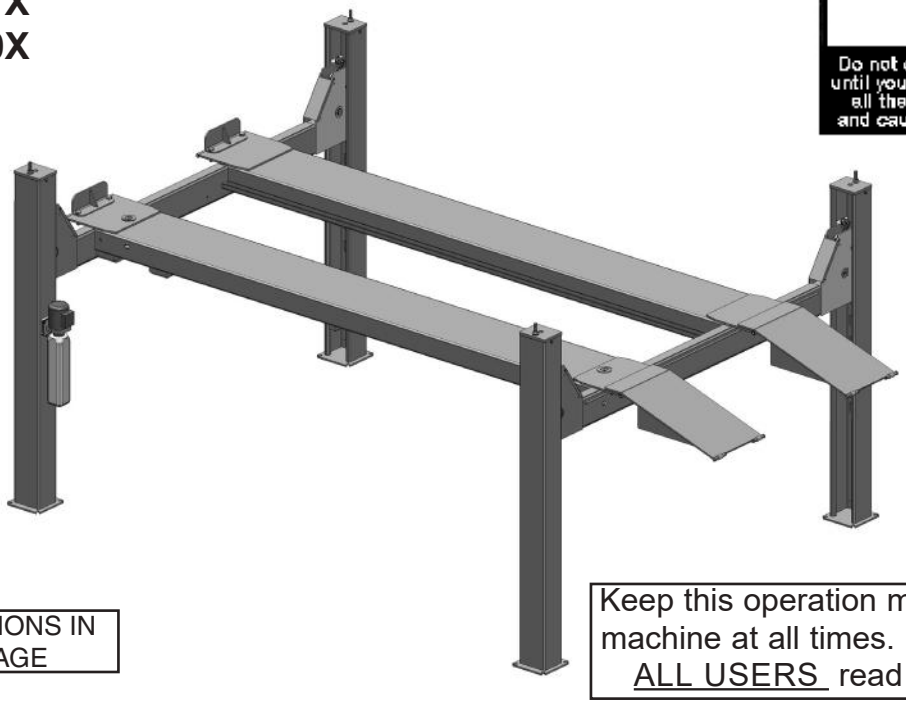

ORIGINAL INSTRUCTIONS IN ENGLISH LANGUAGE

Keep this operation manual near the machine at all times. Make sure that ALL USERS read this manual.

RECEIVING

The shipment should be thoroughly inspected as soon as it is received. The signed Bill of Lading is acknowledgement by the shipping carrier as receipt of this product as listed in your invoice as being in a good condition of shipment. If any of these goods listed on this Bill of Lading are missing or damaged, do not accept goods until the shipping carrier makes a notation on the freight bill of the missing or damaged goods. Do this for your own protection.

BE SAFE

Your new lift was designed and built with safety in mind. However, your overall safety can be increased with proper training and thoughtful operation on the part of the operator. DO NOT operate or repair this equipment without reading this manual and the important safety instructions shown inside. Keep this operation manual near the lift at all times. Make sure that ALL USERS read and understand this manual.

Copyright ©2021 by BendPak Inc. All rights reserved.

BendPak®
PROVIDING AUTOMOTIVE SERVICE SOLUTIONS

1645 Lemonwood Dr.
Santa Paula, CA. 93060, USA
Toll Free (800) 933-9970
Tel: (805) 253-2363
www.bendpak.com

LIFT WILL NOT STAY UP

POSSIBLE CAUSE

1. Air in oil, (1,2,3)
2. Check valve leaks, (6)
3. Cylinders leak internally, (7)
4. Lowering valve leaks, (4,5,1,7,6)
5. Leaking fittings, (8)

REMEDY	***INSTRUCTION***
1. Check oil level	The oil level should be up to the bleed screw in the reservoir with the lift all the way down.
2. Oil seal damaged and cocked	Replace oil seal around pump shaft.
3. Bleed cylinder	Refer to Installation Manual.
4. Flush release valve	Hold release handle down and start unit allowing it to run for 15 seconds.
5. Replace with new valve	Replace with new valve.
6. Return unit for repair	Return unit for repair.
7. See Installation Manual	Consult Lift Manufacturer.
8. Check complete hydraulic system for leaks.	Tighten all hydraulics fittings and inspects all hoses.

Grease Port / Lubrication Locations

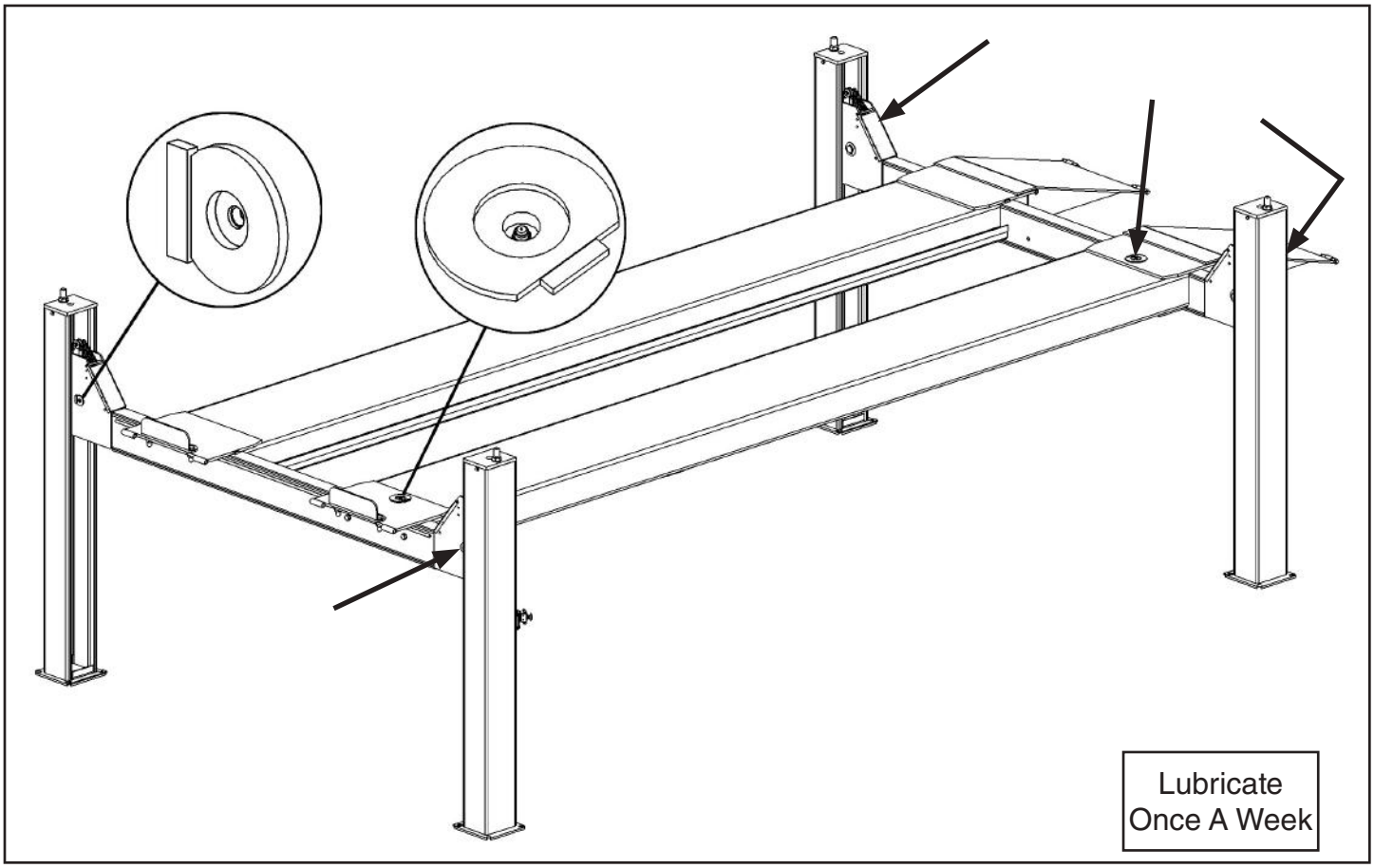

Torque Recommendations

VALUES ARE STATED IN FOOT POUNDS (ft-lb)					
					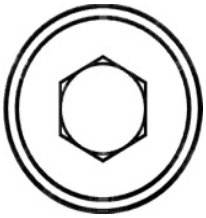
		SAE 0-1-2	SAE Grade 5	SAE Grade 8	SOCKET HEAD CAP SCREW
		CLASS 4.8	CLASS 8.8	CLASS 10.9	CLASS 12.9
Bolt Size (SAE)	**Bolt Size (Metric)**				
1/4-20	M6 x 1.0	6	10	14	13
5/16-18	M8 x 1.25	12	19	29	31.4
3/8-16	M10 x 1.50	20	33	47	62
7/16-14		32	54	78	
1/2-13	M12 x 1.75	47	78	119	108
9/16-12	M14 x 2.00	69	114	169	173
5/8-11	M16 x 2.00	96	154	230	269
3/4-10	M18 x 2.50	155	257	380	372
7/8-9	M22 x 2.50	206	382	600	716
3/4 Anchor Bolts		75 MIN 110 MAX			

A

BENDPAK
BP
ABOVE-GROUND LIFTS
BendPak

B

DANGER
VISUALLY CONFIRM THAT ALL PRIMARY SAFETY LOCKS ARE ENGAGED BEFORE ENTERING WORK AREA.
Suspension components on this lift are intended to raise and lower lift; they are NOT load-holding devices. Do not go under an elevated lift until visual confirmation is made that the lift is engaged on its Safety Locks. Refer to the manual for proper Safety Lock procedures and additional instructions.
VÉRIFIER VISUELLEMENT QUE TOUS LES VERROUS DE SÉCURITÉ PRIMAIRES SONT ENGAGÉS AVANT D'ENTRER DANS LA ZONE DE TRAVAIL.
Les composants de suspension de cet élévateur sont destinés à élever et abaisser l'ascenseur; ce ne sont PAS des dispositifs de maintien de la charge. Ne passez pas sous un ascenseur surélevé avant d'avoir obtenu la confirmation visuelle que l'ascenseur est engagé sur ses serrures de sécurité. Reportez-vous au manuel pour connaître les procédures de verrouillage de sécurité et les instructions supplémentaires.
WARNING
Wire Rope Inspection and Maintenance
Failure to read, understand, and follow these instructions may cause death or serious injury. Read and understand these instructions before using lift.
ATTENTION
Inspection et maintenance des câbles
Lisez et comprenez ces instructions avant d'utiliser l'ascenseur. Ne pas lire, comprendre et suivre ces instructions peut provoquer des blessures graves, voire mortelles.
IMPORTANT
OPERATION / MAINTENANCE
INSTRUCTIONS - PLEASE READ
TO RAISE LIFT
TO LOWER LIFT
REQUIRED MONTHLY MAINTENANCE
WARNING
ATTENTION

C

CAUTION
Lift to be used by trained operator ONLY.
Authorized personnel only in lift area.
WARNING
Clear area if vehicle is in danger of falling.
Remain clear of lift when raising or lowering vehicle.
Keep clear of pinch points when lift is moving.
Keep feet clear of lift while lowering.
Do not overide self-closing lift controls.
Chock wheel to prevent vehicle movement.
NOTICE
Read operating and safety manuals before using lift.
Proper maintenance and inspection is necessary for safe operation.
Do not operate a damaged lift.
The messages and pictographs shown are generic in nature and are meant to generally represent hazards common to all automotive lifts regardless of specific style.
Funding for the development and validation of these labels was provided by the Automotive Lift Institute, PO Box 85 Cortland, NY 13045.
Replacement label sets may be obtained from the original lift manufacturer and ALI's member companies. They are protected by copyright.
www.autolift.org
© 2012 by ALI, Inc.
ALIWL200x

D

DANGER

THE MAXIMUM LIFTING CAPACITY FOR THIS LIFT IS DESCRIBED BELOW

Maximum Lifting Capacity
Max. Lifting Cap. / Front of Lift Center
Max. Lifting Cap. / Rear of Lift Center

Exceeding the weight capacity of this lift can damage lift and/or property and may cause personal harm, injury or death to operators and/or bystanders. All vehicles MUST be positioned on lift with CENTER OF GRAVITY midway between adapters and/or centered on runways. Damage to lift due to overloading or misuse IS NOT covered under warranty.

LA CAPACITÉ DE LEVAGE MAXIMUM POUR CE LEVAGE EST DÉCRIT CI-DESSOUS

Capacité de Levage Maximale
Max. Capuchon De Levage. / Avant du centre de relèvement
Max. Capuchon De Levage. / Arrière du centre de levage

Le dépassement de la capacité de poids de cet élévateur peut endommager l'ascenseur et / ou les biens et peut causer des dommages corporels, des blessures voire la mort aux opérateurs et / ou aux passants. Tous les véhicules DOIVENT être placés sur l'élévateur avec le CENTRE DE GRAVITÉ à mi-chemin entre les adaptateurs et / ou au centre des pistes. Dommages à soulever dus à la surcharge ou une mauvaise utilisation N'EST PAS couverte par la garantie.

P/N 5905957

E

ATTENTION

MAXIMUM LIFTING CAPACITY
CAPACITÉ DE LEVAGE MAXIMUM

Lbs.
Kg.

P/N 5905955

F

BendPak
PROVIDING AUTOMOTIVE SERVICE SOLUTIONS

SANTA PAULA, CA USA
WWW.BENDPAK.COM
PN 5905940

LIFT TYPE: SURFACE MOUNT	MFG. BPK SEE DATA PLATE FOR PRODUCT DETAILS
POWER: ELECTRIC/HYDRAULIC	INSTALLATION - SEE OWNERS GUIDE OR CONTACT FACTORY

SAFETY INSTRUCTIONS: IF ATTACHMENTS, ACCESSORIES OR CONFIGURATION MODIFYING COMPONENTS THAT ARE LOCATED IN THE LOAD PATH, AFFECT OPERATION OF THE LIFT, AFFECT THE LIFT ELECTRICAL LISTING OR AFFECT INTENDED VEHICLE ACCOMMODATION ARE USED ON THIS LIFT AND, IF THEY ARE NOT CERTIFIED FOR USE ON THIS LIFT, THEN THE CERTIFICATION OF THIS LIFT SHALL BECOME NULL AND VOID. CONTACT THE PARTICIPANT FOR INFORMATION PERTAINING TO CERTIFIED ATTACHMENTS, ACCESSORIES OR CONFIGURATION MODIFYING COMPONENTS.

BENDPAK LIFTS ARE SUPPLIED WITH CONCRETE FASTNERS MEETING THE CRITERIA AS PRESCRIBED BY ASTM E488 - 96(2003). LIFT BUYERS ARE RESPONSIBLE FOR ANY SPECIAL REGIONAL STRUCTURAL AND/OR SEISMIC ANCHORING REQUIREMENTS SPECIFIED BY ANY OTHER AGENCIES AND/OR CODES SUCH AS THE UNIFORM BUILDING CODE (UBC) AND/OR INTERNATIONAL BUILDING CODE (IBC).

THE MANUFACTURE, USE, SALE OR IMPORT OF THIS PRODUCT MAY BE SUBJECT TO ONE OR MORE UNITED STATES PATENTS, OR PENDING APPLICATIONS, OWNED BY BENDPAK, INC.

DO NOT REMOVE ENGINEERED BY BENDPAK INC. USA MADE IN CHINA

G

NOTICE

If attachments, accessories, or configuration modifying components used on this lift are located in the load path and affect operation of the lift, affect the lift electrical listing, or affect intended vehicle accommodation; and if they are not certified for use on this lift, then the certification of this lift shall become null and void. Contact the participant for information pertaining to certified attachments, accessories, or configuration modifying components.

www.autolift.org ©2011 by ALI, Inc. ALI / WLSIA01

H

CERTIFIED AUTOMOTIVE LIFT

ALI CERTIFIED
To the provisions of
ANSI/ALI ALCTV-2011
SAFETY REQUIREMENTS FOR CONSTRUCTION, TESTING AND VALIDATION

Automotive Lift Institute, Inc. | Cortland, NY 13045

MET LISTED
Conforms to
ANSI/UL 201
SAFETY STANDARD FOR GARAGE EQUIPMENT

MET Laboratories, Inc.
BALTIMORE, MD 21220

Certification Label Serial Number
AL00617000J

I

BendPak
Santa Paula, CA USA
www.bendpak.com

MODEL NUMBER	
DESCRIPTION	
LIFT CAPACITY	DATE OF MFG.
ROLLING JACK MAX CAP.	MAX PSI / BAR

VOLTAGE	SERIAL NUMBER
☐ 110-240V, 50-60 Hz, 1 Ph ☐ 208-240V, 50-60 Hz, 1 Ph ☐ 380-415V, 50-60 Hz, 3 Ph ☐ 208-440V, 50-60 Hz, 3 Ph	UPC

DANGER! Disconnect Power Before Servicing CE EAC
WARRANTY VOID IF DATA PLATE IS REMOVED PN 5905953

J

BendPak
Santa Paula, CA USA
www.bendpak.com

MODEL NUMBER	
DESCRIPTION	
LIFT CAPACITY	DATE OF MFG.
ROLLING JACK MAX CAP.	MAX PSI / BAR

VOLTAGE	SERIAL NUMBER
☐ 110-240V, 50-60 Hz, 1 Ph ☐ 208-240V, 50-60 Hz, 1 Ph ☐ 380-415V, 50-60 Hz, 3 Ph ☐ 208-440V, 50-60 Hz, 3 Ph	UPC

DANGER! Disconnect Power Before Servicing EAC
WARRANTY VOID IF DATA PLATE IS REMOVED PN 5905952

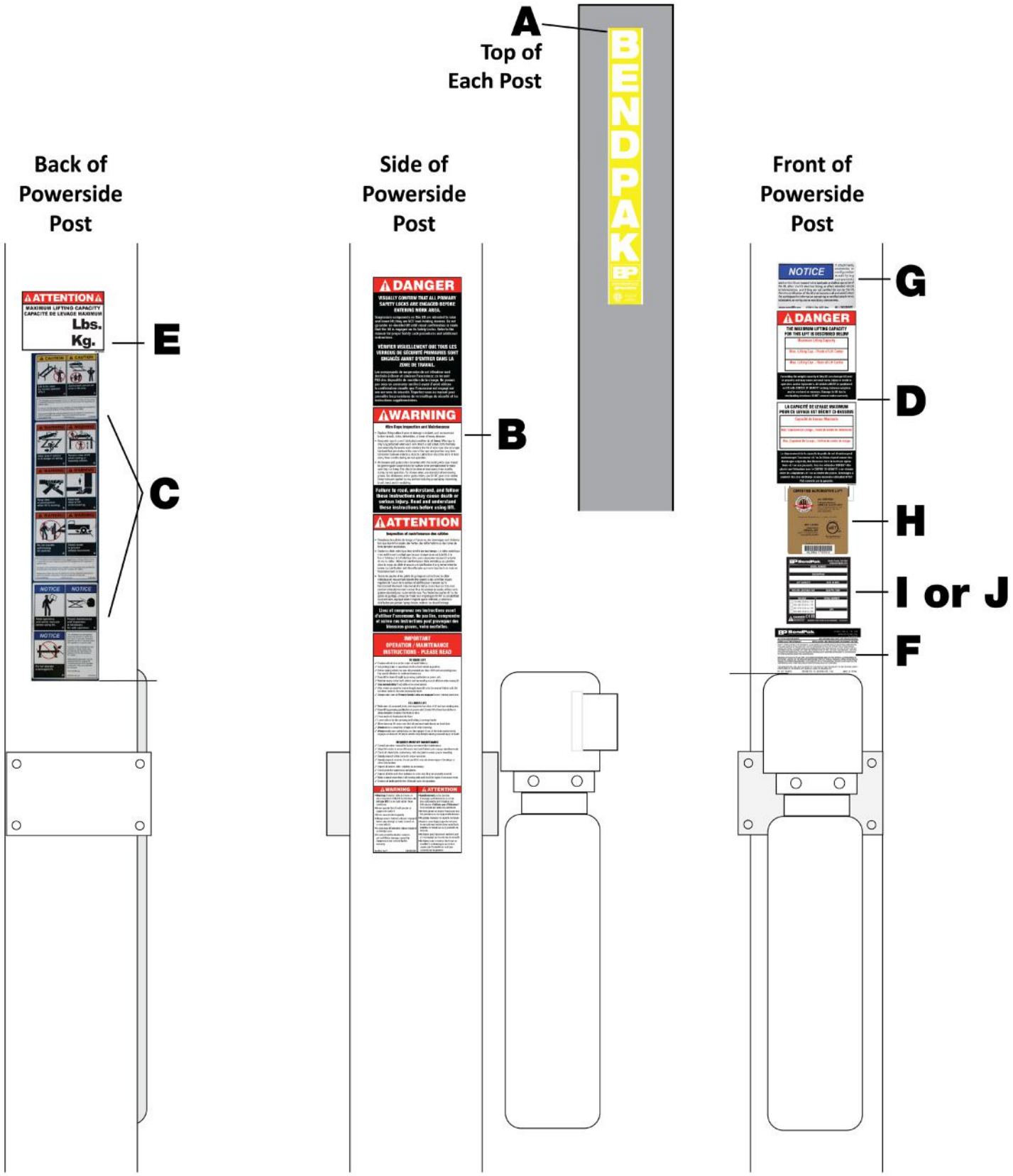
A
Top of
Each Post
BENDPAK
Back of
Powerside
Post
Side of
Powerside
Post
Front of
Powerside
Post
ATTENTION
MAXIMUM LIFTING CAPACITY
CAPACITÉ DE LEVAGE MAXIMUM
Lbs.
Kg.
E
C
DANGER
WARNING
ATTENTION
B
NOTICE
G
D
H
I or J
F

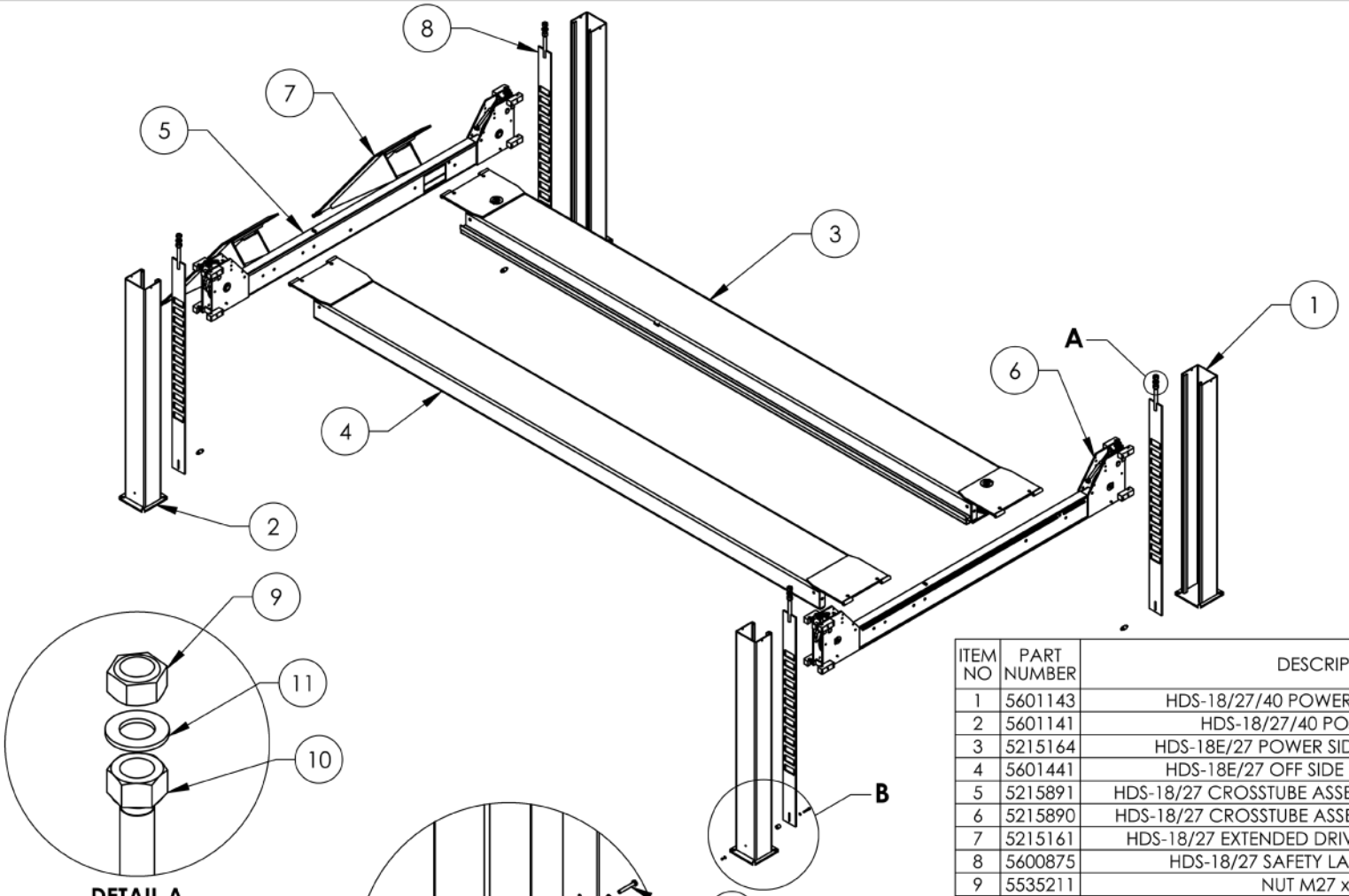

DETAIL A
SCALE 1 : 5

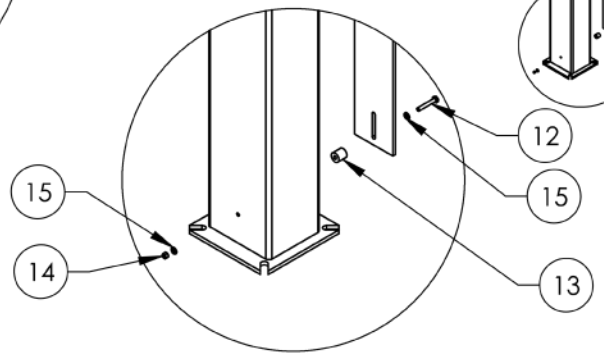

DETAIL B
SCALE 1 : 20

ITEM NO	PART NUMBER	DESCRIPTION	QTY	REV
1	5601143	HDS-18/27/40 POWER POST WELDMENT	1	B
2	5601141	HDS-18/27/40 POST WELDMENT	3	B
3	5215164	HDS-18E/27 POWER SIDE RAMP ASSEMBLY	1	Y
4	5601441	HDS-18E/27 OFF SIDE RAMP WELDMENT	1	A
5	5215891	HDS-18/27 CROSSTUBE ASSEMBLY, LARGE WINDOW	1	B
6	5215890	HDS-18/27 CROSSTUBE ASSEMBLY, SMALL WINDOW	1	B
7	5215161	HDS-18/27 EXTENDED DRIVE UP RAMP ASSEMBLY	2	J
8	5600875	HDS-18/27 SAFETY LADDER WELDMENT	4	C
9	5535211	NUT M27 x 3.0 NL	4	--
10	5535210	NUT M27 x 3.0	4	--
11	5545103	WASHER M27 x 50mm	4	--
12	5530046	HHB M10x1.5x65	4	--
13	5746088	HDS-18/27 SPACER, SAFETY LADDER, 31mm LG	4	B
14	5535013	NUT M10 x 1.5 NL	4	--
15	5545341	WASHER M10 x Ø20 FLAT	8	--

NEXT ASSEMBLY
5260604

DO NOT SCALE DRAWING

	NAME	DATE
DRAWN	TM	12/12/2019
CHECKED	OR	11/12/2020

DIMENSIONS ARE IN MM

THIRD ANGLE PROJECTION

PROPRIETARY AND CONFIDENTIAL
THE INFORMATION CONTAINED IN THIS DRAWING IS THE SOLE PROPERTY OF **BENDPAK INC.** ANY REPRODUCTION IN PART OR AS A WHOLE WITHOUT THE WRITTEN PERMISSION OF **BENDPAK INC.** IS PROHIBITED.

BendPak
1645 LEMONWOOD DR.
SANTA PAULA, CA 93060

TITLE: HDS-18E LIFT SUPERSTRUCTURE

SIZE	DWG. NO.	REV
A	5245088	C

SCALE: 1:55 SHEET 1 OF 1

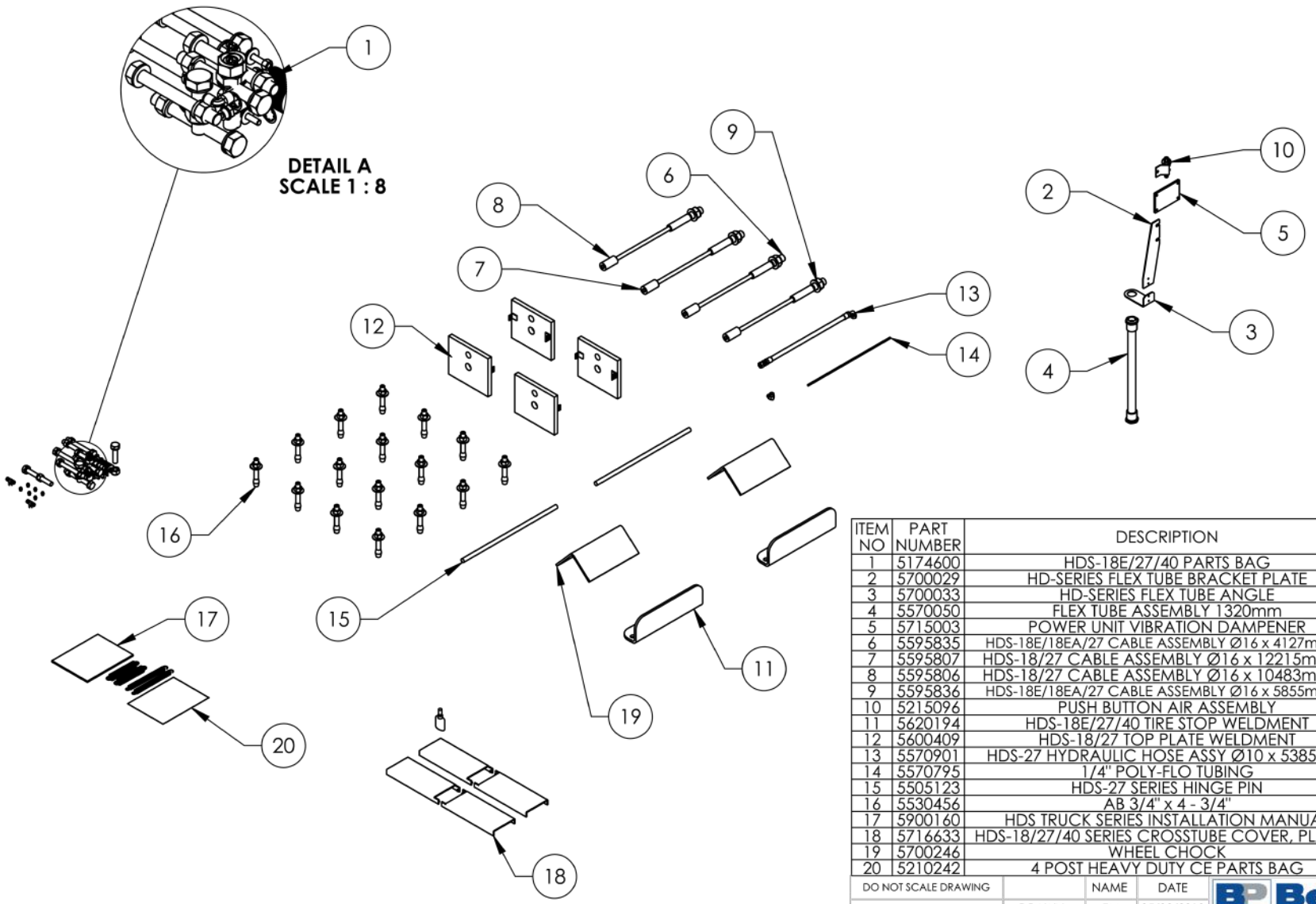

ITEM NO	PART NUMBER	DESCRIPTION	QTY.	REV
1	5174600	HDS-18E/27/40 PARTS BAG	1	G
2	5700029	HD-SERIES FLEX TUBE BRACKET PLATE	1	F
3	5700033	HD-SERIES FLEX TUBE ANGLE	1	E
4	5570050	FLEX TUBE ASSEMBLY 1320mm	1	B
5	5715003	POWER UNIT VIBRATION DAMPENER	1	B
6	5595835	HDS-18E/18EA/27 CABLE ASSEMBLY Ø16 x 4127mm ST	1	E
7	5595807	HDS-18/27 CABLE ASSEMBLY Ø16 x 12215mm ST	1	J
8	5595806	HDS-18/27 CABLE ASSEMBLY Ø16 x 10483mm ST	1	H
9	5595836	HDS-18E/18EA/27 CABLE ASSEMBLY Ø16 x 5855mm ST	1	E
10	5215096	PUSH BUTTON AIR ASSEMBLY	1	G
11	5620194	HDS-18E/27/40 TIRE STOP WELDMENT	2	C
12	5600409	HDS-18/27 TOP PLATE WELDMENT	4	D
13	5570901	HDS-27 HYDRAULIC HOSE ASSY Ø10 x 5385mm	1	C
14	5570795	1/4" POLY-FLO TUBING	24000mm*	-
15	5505123	HDS-27 SERIES HINGE PIN	2	B
16	5530456	AB 3/4" x 4 - 3/4"	16	-
17	5900160	HDS TRUCK SERIES INSTALLATION MANUAL	1	-
18	5716633	HDS-18/27/40 SERIES CROSSTUBE COVER, PLASTIC	4	C
19	5700246	WHEEL CHOCK	2	B
20	5210242	4 POST HEAVY DUTY CE PARTS BAG	1	A

NEXT ASSEMBLY
5260604
5260606

DO NOT SCALE DRAWING

	NAME	DATE
DRAWN	TM	05/08/2013
CHECKED	OR	4/24/2020

DIMENSIONS ARE IN MM

THIRD ANGLE PROJECTION

PROPRIETARY AND CONFIDENTIAL
THE INFORMATION CONTAINED IN THIS DRAWING IS THE SOLE PROPERTY OF **BENDPAK INC.** ANY REPRODUCTION IN PART OR AS A WHOLE WITHOUT THE WRITTEN PERMISSION OF **BENDPAK INC.** IS PROHIBITED.

BendPak
1645 LEMONWOOD DR.
SANTA PAULA, CA 93060

TITLE:
HDS-18E/27 PARTS BOX

SIZE	DWG. NO.	REV
A	5250172	K

SCALE: 1:25 SHEET 1 OF 1

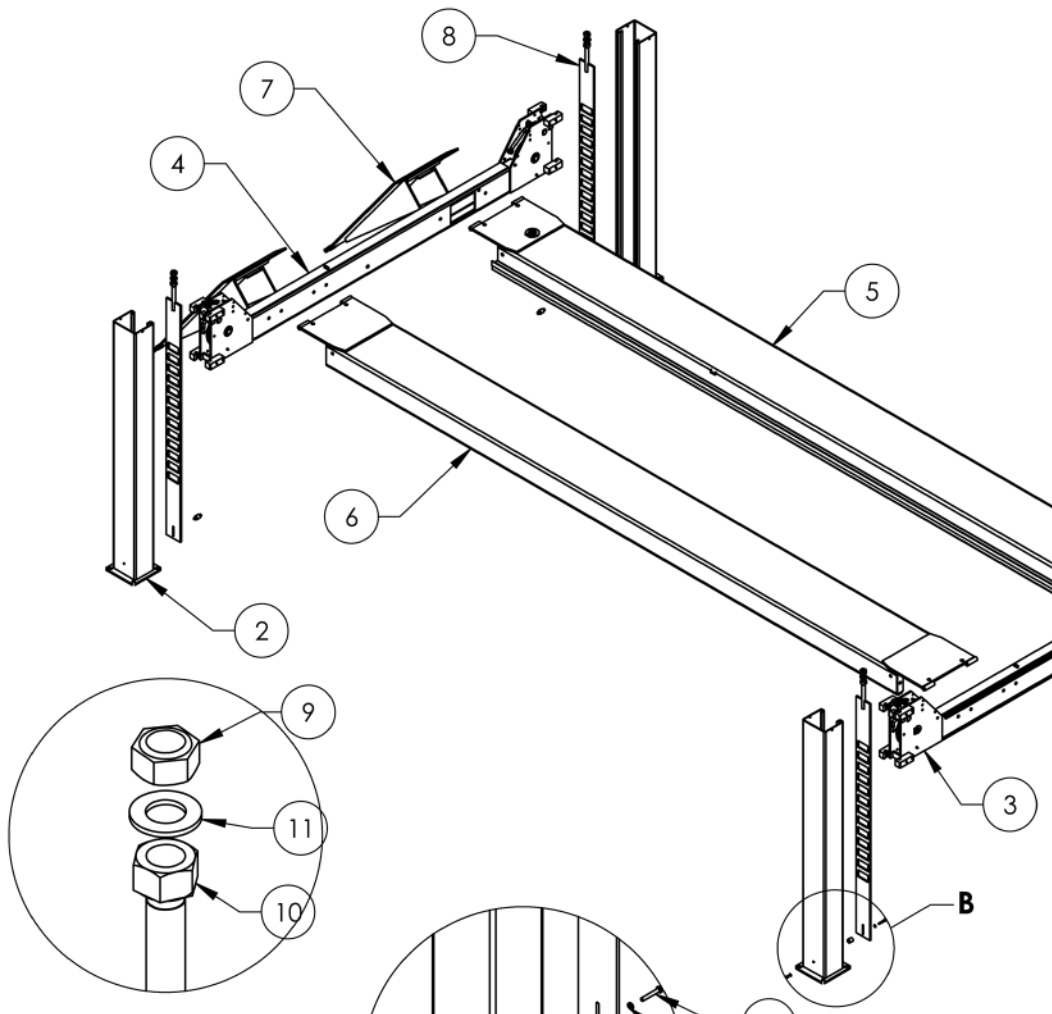

DETAIL A
SCALE 1 : 5

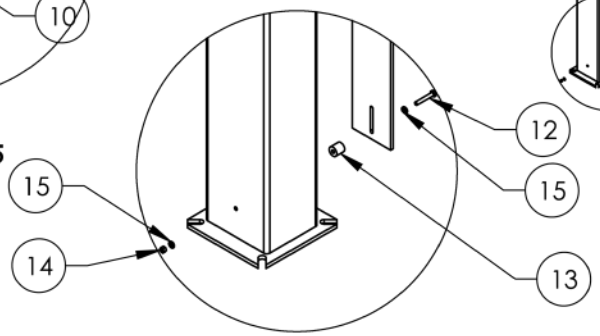

DETAIL B
SCALE 1 : 20

ITEM NO	PART NUMBER	DESCRIPTION	QTY	REV
1	5601143	HDS-18/27/40 POWER POST WELDMENT	1	B
2	5601141	HDS-18/27/40 POST WELDMENT	3	B
3	5215890	HDS-18/27 CROSSTUBE ASSEMBLY, SMALL WINDOW	1	B
4	5215891	HDS-18/27 CROSSTUBE ASSEMBLY, LARGE WINDOW	1	B
5	5215164	HDS-18E/27 POWER SIDE RAMP ASSEMBLY	1	Y
6	5601441	HDS-18E/27 OFF SIDE RAMP WELDMENT	1	A
7	5215161	HDS-18/27 EXTENDED DRIVE UP RAMP ASSEMBLY	2	J
8	5600875	HDS-18/27 SAFETY LADDER WELDMENT	4	C
9	5535211	NUT M27 x 3.0 NL	4	-
10	5535210	NUT M27 x 3.0	4	-
11	5545103	WASHER M27 x 50mm	4	-
12	5530046	HHB M10x1.5x65	4	-
13	5746088	HDS-18/27 SPACER, SAFETY LADDER, 31mm LG	4	B
14	5535013	NUT M10 x 1.5 NL	4	-
15	5545341	WASHER M10 x Ø20 FLAT	8	-

DO NOT SCALE DRAWING

	NAME	DATE
DRAWN	TM	12/17/2019
CHECKED	OR	11/12/2020

DIMENSIONS ARE IN MM

THIRD ANGLE PROJECTION

PROPRIETARY AND CONFIDENTIAL
THE INFORMATION CONTAINED IN THIS DRAWING IS THE SOLE PROPERTY OF **BENDPAK INC.** ANY REPRODUCTION IN PART OR AS A WHOLE WITHOUT THE WRITTEN PERMISSION OF **BENDPAK INC.** IS PROHIBITED.

BendPak
1645 LEMONWOOD DR.
SANTA PAULA, CA 93060

TITLE: HDS-27 LIFT SUPERSTRUCTURE

SIZE	DWG. NO.	REV
A	5245090	C

SCALE: 1:55 | SHEET 1 OF 1

NEXT ASSEMBLY
5260606

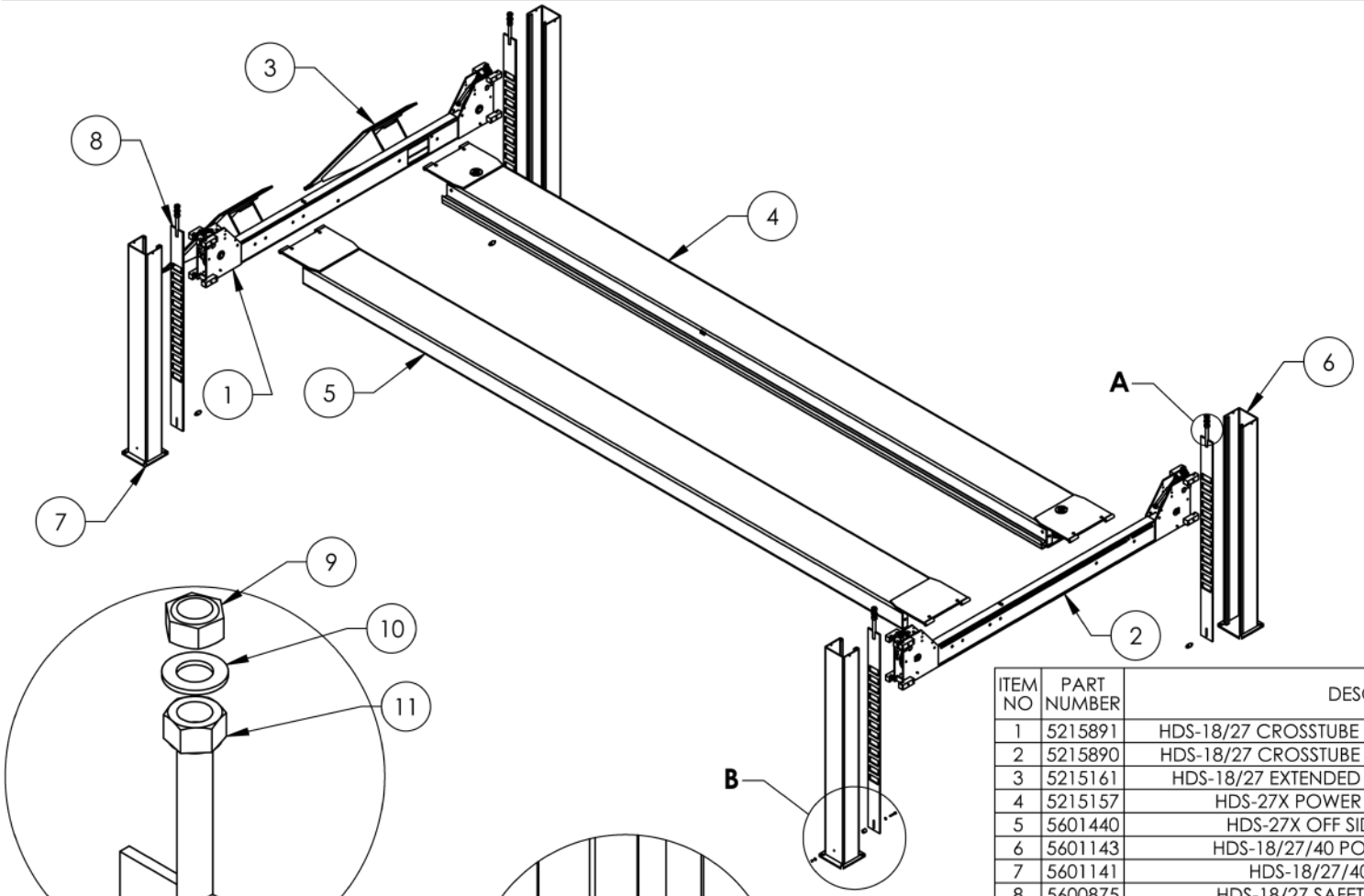

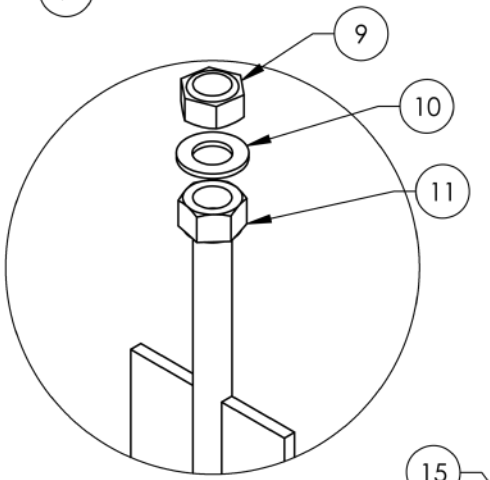

DETAIL A
SCALE 1 : 5

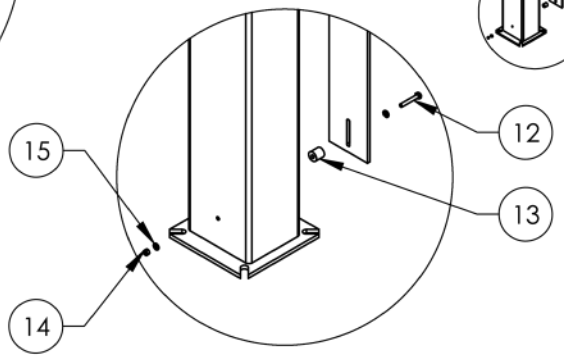

DETAIL B
SCALE 1 : 20

ITEM NO	PART NUMBER	DESCRIPTION	QTY	REV
1	5215891	HDS-18/27 CROSSTUBE ASSEMBLY, LARGE WINDOW	1	B
2	5215890	HDS-18/27 CROSSTUBE ASSEMBLY, SMALL WINDOW	1	B
3	5215161	HDS-18/27 EXTENDED DRIVE UP RAMP ASSEMBLY	2	J
4	5215157	HDS-27X POWER SIDE RAMP ASSEMBLY	1	V
5	5601440	HDS-27X OFF SIDE RAMP WELDMENT	1	A
6	5601143	HDS-18/27/40 POWER POST WELDMENT	1	B
7	5601141	HDS-18/27/40 POST WELDMENT	3	B
8	5600875	HDS-18/27 SAFETY LADDER WELDMENT	4	C
9	5535211	NUT M27 x 3.0 NL	4	-
10	5545103	WASHER M27 x 50mm	4	-
11	5535210	NUT M27 x 3.0	4	-
12	5530046	HHB M10x1.5x65	4	-
13	5746088	HDS-18/27 SPACER, SAFETY LADDER, 31mm LG	4	B
14	5535013	NUT M10 x 1.5 NL	4	-
15	5545341	WASHER M10 x Ø20 FLAT	8	-

DO NOT SCALE DRAWING

	NAME	DATE
DRAWN	CA	12/16/2019
CHECKED	OR	11/12/2020

DIMENSIONS ARE IN MM

THIRD ANGLE PROJECTION

PROPRIETARY AND CONFIDENTIAL
THE INFORMATION CONTAINED IN THIS DRAWING IS THE SOLE PROPERTY OF **BENDPAK INC.** ANY REPRODUCTION IN PART OR AS A WHOLE WITHOUT THE WRITTEN PERMISSION OF **BENDPAK INC.** IS PROHIBITED.

BendPak
1645 LEMONWOOD DR.
SANTA PAULA, CA 93060

TITLE: HDS-27X LIFT SUPERSTRUCTURE

SIZE	DWG. NO.	REV
A	5245086	C

SCALE: 1:60 SHEET 1 OF 1

NEXT ASSEMBLY
5260602

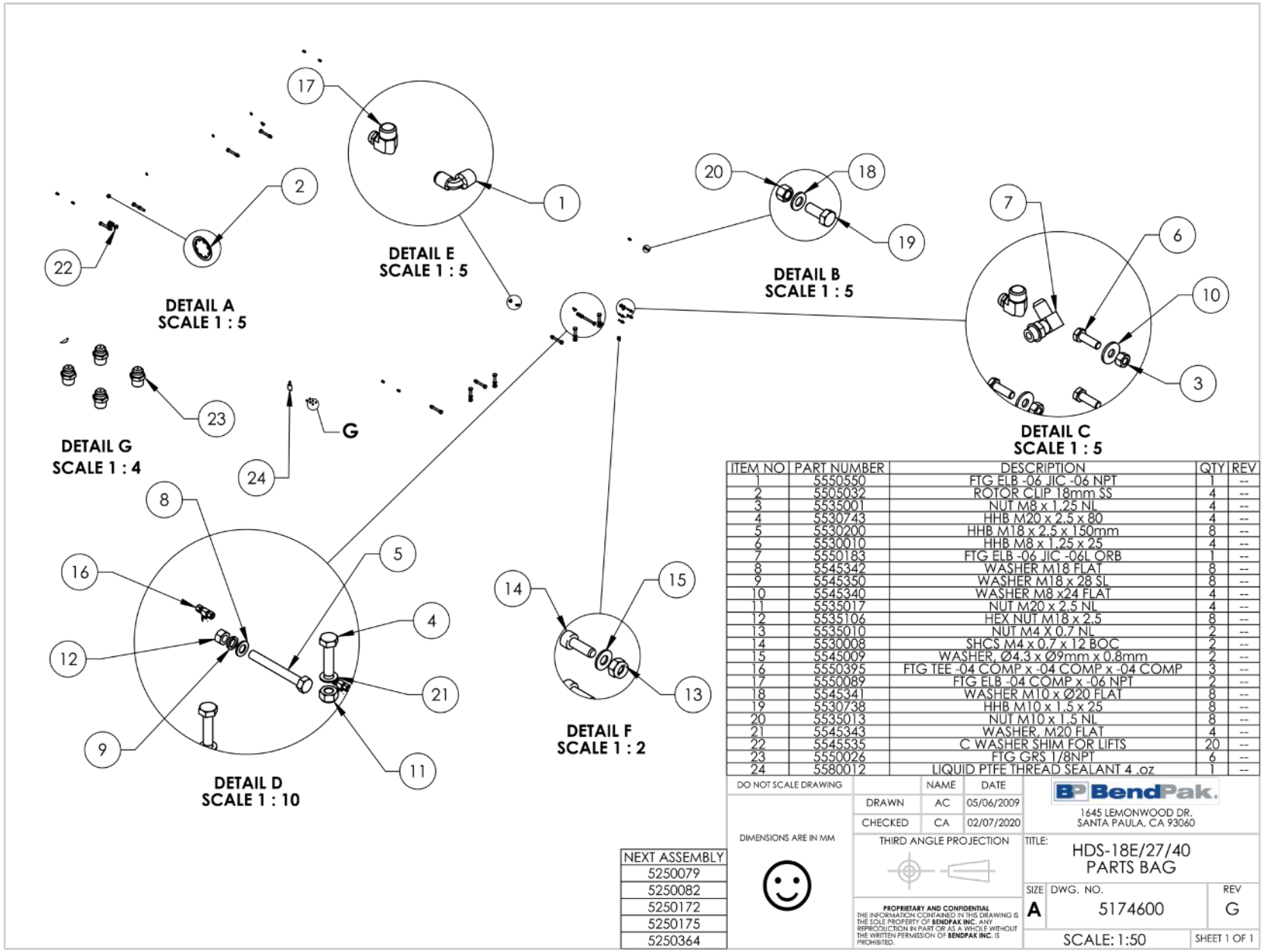

ITEM NO	PART NUMBER	DESCRIPTION	QTY	REV
1	5550550	FTG ELB -06 JIC -06 NPT	1	--
2	5505032	ROTOR CLIP 18mm SS	4	--
3	5535001	NUT M8 x 1.25 NL	4	--
4	5530743	HHB M20 x 2.5 x 80	4	--
5	5530200	HHB M18 x 2.5 x 150mm	8	--
6	5530010	HHB M8 x 1.25 x 25	4	--
7	5550183	FTG ELB -06 JIC -06L ORB	1	--
8	5545342	WASHER M18 FLAT	8	--
9	5545350	WASHER M18 x 28 SL	8	--
10	5545340	WASHER M8 x24 FLAT	4	--
11	5535017	NUT M20 x 2.5 NL	4	--
12	5535106	HEX NUT M18 x 2.5	8	--
13	5535010	NUT M4 X 0.7 NL	2	--
14	5530008	SHCS M4 x 0.7 x 12 BOC	2	--
15	5545009	WASHER, Ø4.3 x Ø9mm x 0.8mm	2	--
16	5550395	FTG TEE -04 COMP x -04 COMP x -04 COMP	3	--
17	5550089	FTG ELB -04 COMP x -06 NPT	2	--
18	5545341	WASHER M10 x Ø20 FLAT	8	--
19	5530738	HHB M10 x 1.5 x 25	8	--
20	5535013	NUT M10 x 1.5 NL	8	--
21	5545343	WASHER, M20 FLAT	4	--
22	5545535	C WASHER SHIM FOR LIFTS	20	--
23	5550026	FTG GRS 1/8NPT	6	--
24	5580012	LIQUID PTFE THREAD SEALANT 4 .oz	1	--

NEXT ASSEMBLY
5250079
5250082
5250172
5250175
5250364

DO NOT SCALE DRAWING

	NAME	DATE
DRAWN	AC	05/06/2009
CHECKED	CA	02/07/2020

DIMENSIONS ARE IN MM

THIRD ANGLE PROJECTION

PROPRIETARY AND CONFIDENTIAL
THE INFORMATION CONTAINED IN THIS DRAWING IS THE SOLE PROPERTY OF **BENDPAK INC.** ANY REPRODUCTION IN PART OR AS A WHOLE WITHOUT THE WRITTEN PERMISSION OF **BENDPAK INC.** IS PROHIBITED.

BendPak.
1645 LEMONWOOD DR.
SANTA PAULA, CA 93060

TITLE: HDS-18E/27/40 PARTS BAG

SIZE	DWG. NO.	REV
A	5174600	G

SCALE: 1:50 SHEET 1 OF 1

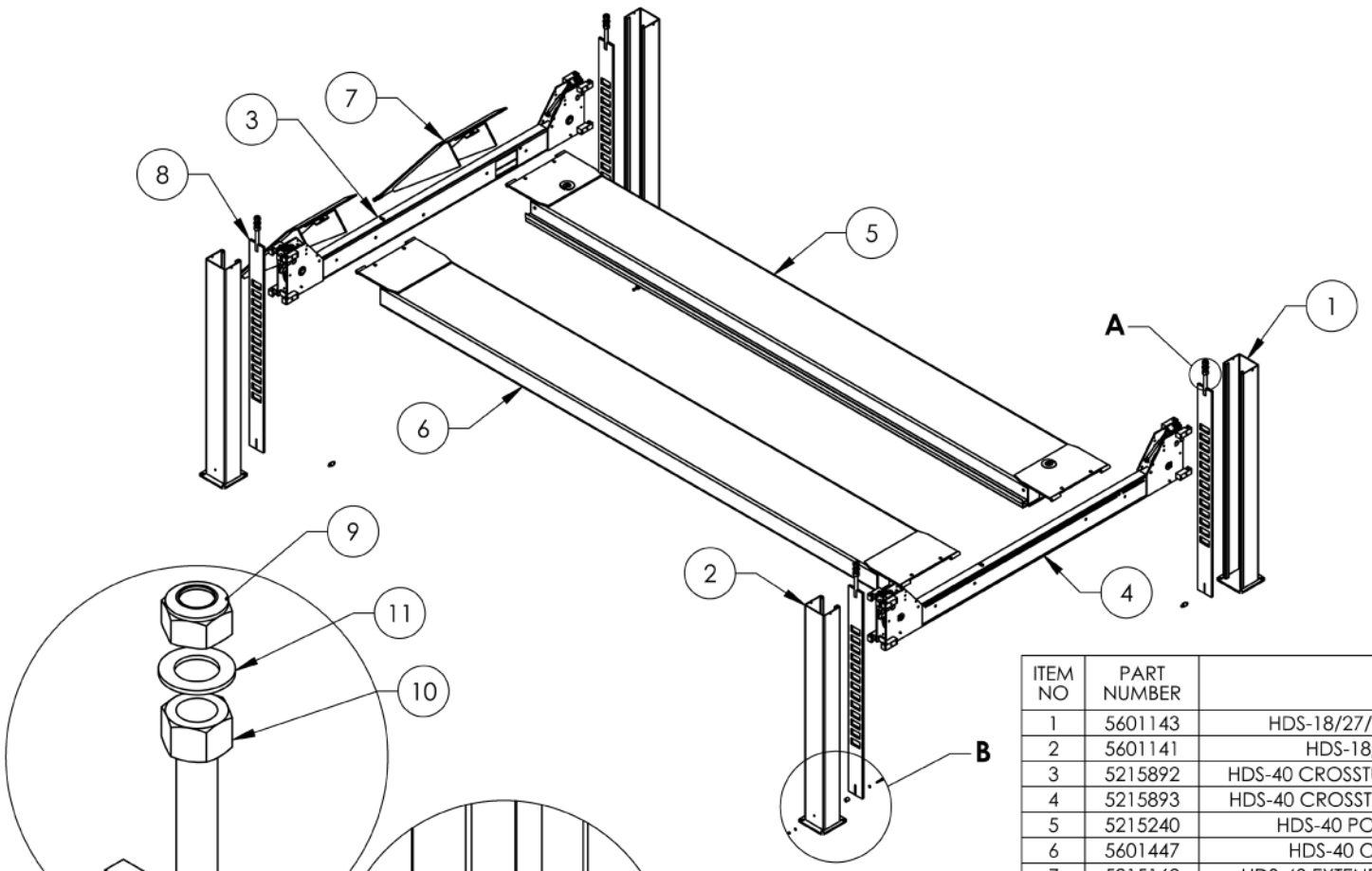

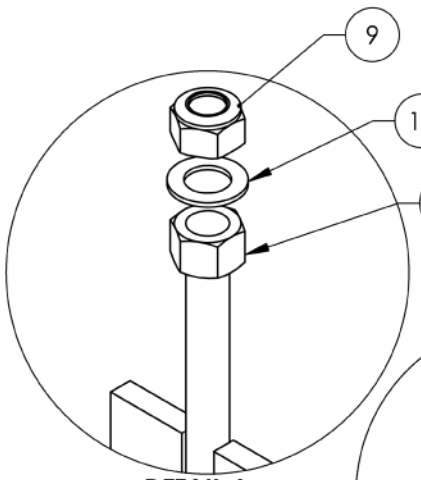

DETAIL A
SCALE 1 : 5

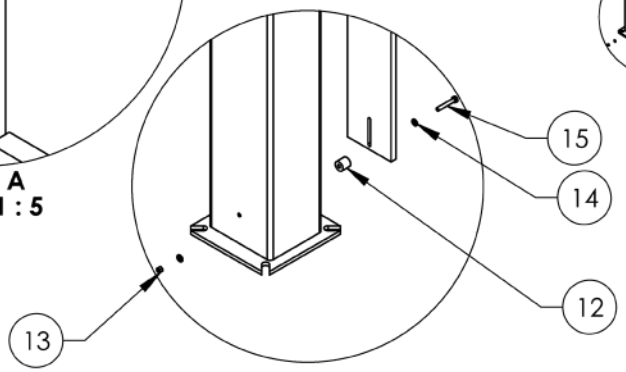

DETAIL B
SCALE 1 : 20

ITEM NO	PART NUMBER	DESCRIPTION	QTY	REV
1	5601143	HDS-18/27/40 POWER POST WELDMENT	1	B
2	5601141	HDS-18/27/40 POST WELDMENT	3	B
3	5215892	HDS-40 CROSSTUBE ASSEMBLY, LARGE WINDOW	1	B
4	5215893	HDS-40 CROSSTUBE ASSEMBLY, SMALL WINDOW	1	B
5	5215240	HDS-40 POWER SIDE RAMP ASSEMBLY	1	Z
6	5601447	HDS-40 OFF SIDE RAMP WELDMENT	1	A
7	5215162	HDS-40 EXTENDED DRIVE UP RAMP ASSEMBLY	2	G
8	5601246	HDS-40 SAFETY LADDER WELDMENT	4	A
9	5535104	NUT M30 x 3.5 NL	4	-
10	5535212	NUT M30 x 3.5	4	-
11	5545415	WASHER M30 x 56 FLAT	4	-
12	5746369	HDS-40 SPACER, SAFETY LADDER, 30mm LG	4	B
13	5535013	NUT M10 x 1.5 NL	4	-
14	5545341	WASHER M10 x Ø20 FLAT	8	-
15	5530046	HHB M10x1.5x65	4	-

DO NOT SCALE DRAWING

DIMENSIONS ARE IN MM

	NAME	DATE
DRAWN	TM	12/17/2019
CHECKED	OR	11/12/2020

THIRD ANGLE PROJECTION

PROPRIETARY AND CONFIDENTIAL
THE INFORMATION CONTAINED IN THIS DRAWING IS THE SOLE PROPERTY OF **BENDPAK INC.** ANY REPRODUCTION IN PART OR AS A WHOLE WITHOUT THE WRITTEN PERMISSION OF **BENDPAK INC.** IS PROHIBITED.

BendPak
1645 LEMONWOOD DR.
SANTA PAULA, CA 93060

TITLE: HDS-40 LIFT SUPERSTRUCTURE

SIZE	DWG. NO.	REV
A	5245091	C

SCALE: 1:60 SHEET 1 OF 1

NEXT ASSEMBLY
5260607

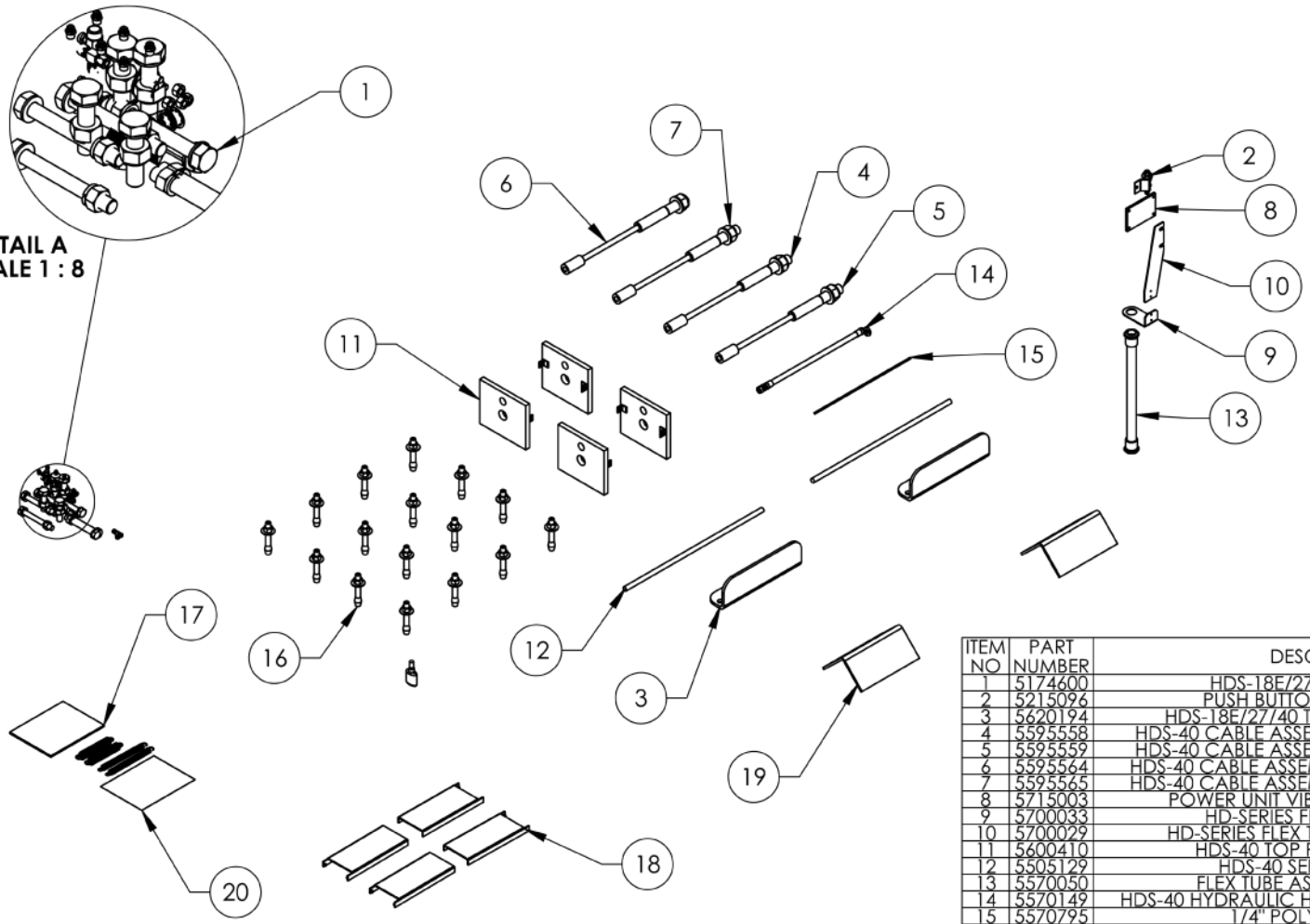

ITEM NO	PART NUMBER	DESCRIPTION	QTY.	REV
1	5174600	HDS-18E/27/40 PARTS BAG	1	G
2	5215096	PUSH BUTTON AIR ASSEMBLY	1	G
3	5620194	HDS-18E/27/40 TIRE STOP WELDMENT	2	C
4	5595558	HDS-40 CABLE ASSEMBLY Ø19 x 4102mm ST	1	B
5	5595559	HDS-40 CABLE ASSEMBLY Ø19 x 5836mm ST	1	B
6	5595564	HDS-40 CABLE ASSEMBLY Ø19 x 10452mm ST	1	B
7	5595565	HDS-40 CABLE ASSEMBLY Ø19 x 12167mm ST	1	B
8	5715003	POWER UNIT VIBRATION DAMPENER	1	B
9	5700033	HD-SERIES FLEX TUBE ANGLE	1	E
10	5700029	HD-SERIES FLEX TUBE BRACKET PLATE	1	F
11	5600410	HDS-40 TOP PLATE WELDMENT	4	C
12	5505129	HDS-40 SERIES HINGE PIN	2	B
13	5570050	FLEX TUBE ASSEMBLY 1320mm	1	B
14	5570149	HDS-40 HYDRAULIC HOSE ASSY Ø10 x 5385mm	1	C
15	5570795	1/4" POLY-FLO TUBING	24000mm*	-
16	5530456	AB 3/4" x 4 - 3/4"	16	-
17	5900160	HDS TRUCK SERIES INSTALLATION MANUAL	1	-
18	5716633	HDS-18/27/40 SERIES CROSSTUBE COVER, PLASTIC	4	C
19	5700246	WHEEL CHOCK	2	B
20	5210242	4 POST HEAVY DUTY CE PARTS BAG	1	A

DO NOT SCALE DRAWING

	NAME	DATE
DRAWN	TS	10/02/2018
CHECKED	OR	4/23/2020

DIMENSIONS ARE IN MM

THIRD ANGLE PROJECTION

PROPRIETARY AND CONFIDENTIAL
THE INFORMATION CONTAINED IN THIS DRAWING IS THE SOLE PROPERTY OF **BENDPAK INC.** ANY REPRODUCTION IN PART OR AS A WHOLE WITHOUT THE WRITTEN PERMISSION OF **BENDPAK INC.** IS PROHIBITED.

BendPak
1645 LEMONWOOD DR.
SANTA PAULA, CA 93060

TITLE: HDS-40 PARTS BOX

SIZE	DWG. NO.	REV
A	5250079	C

SCALE: 1:25 SHEET 1 OF 1

NEXT ASSEMBLY
5260607

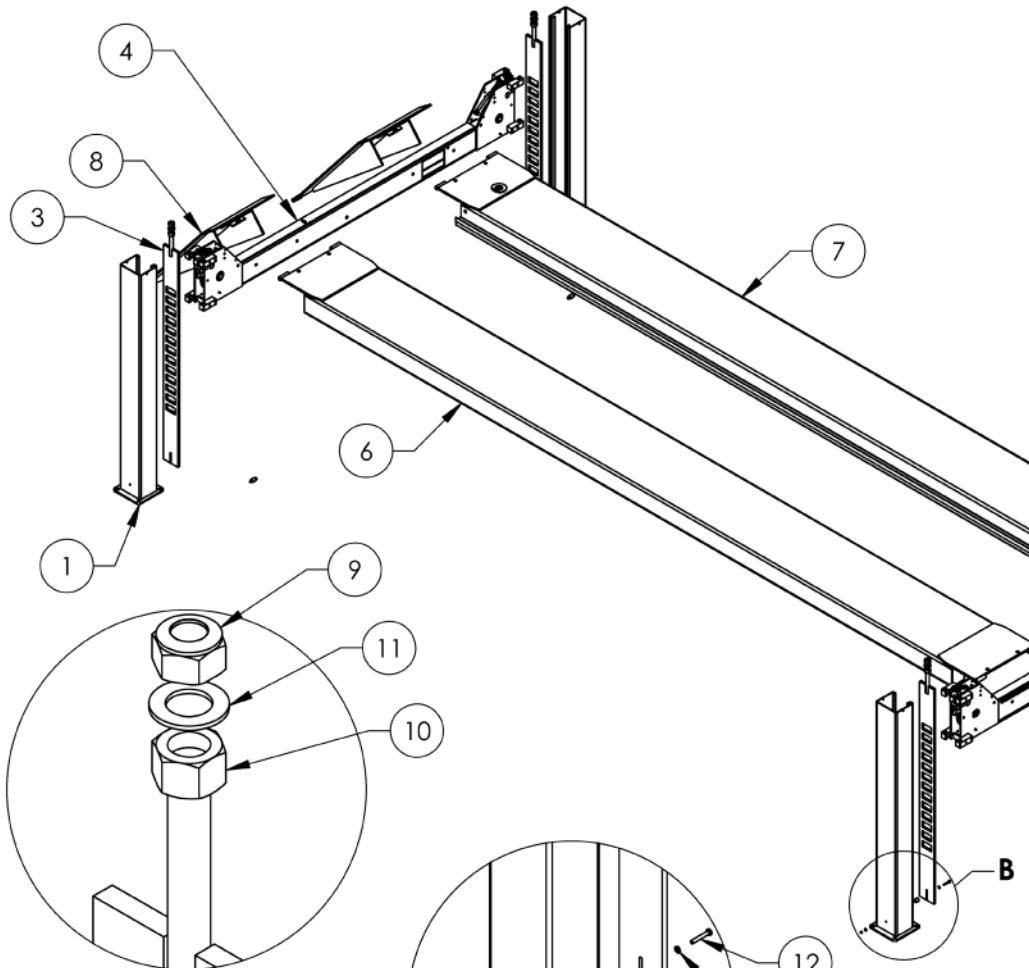

DETAIL A
SCALE 1 : 5

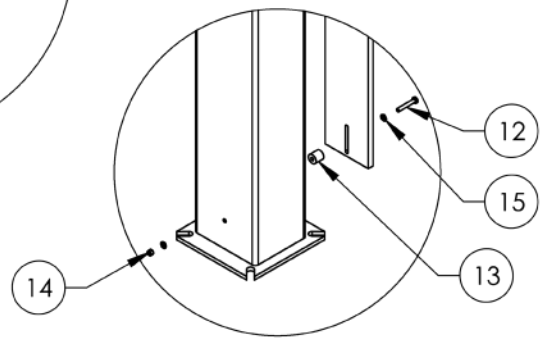

DETAIL B
SCALE 1 : 20

ITEM NO	PART NUMBER	DESCRIPTION	QTY	REV
1	5601141	HDS-18/27/40 POST WELDMENT	3	B
2	5601143	HDS-18/27/40 POWER POST WELDMENT	1	B
3	5601246	HDS-40 SAFETY LADDER WELDMENT	4	A
4	5215892	HDS-40 CROSSTUBE ASSEMBLY, LARGE WINDOW	1	B
5	5215893	HDS-40 CROSSTUBE ASSEMBLY, SMALL WINDOW	1	B
6	5601448	HDS-40X OFF SIDE RAMP WELDMENT	1	A
7	5215149	HDS-40X POWER SIDE RAMP ASSEMBLY	1	X
8	5215162	HDS-40 EXTENDED DRIVE UP RAMP ASSEMBLY	2	G
9	5535104	NUT M30 x 3.5 NL	4	-
10	5535212	NUT M30 x 3.5	4	-
11	5545415	WASHER M30 x 56 FLAT	4	-
12	5530046	HHB M10x1.5x65	4	-
13	5746369	HDS-40 SPACER, SAFETY LADDER, 30mm LG	4	B
14	5535013	NUT M10 x 1.5 NL	4	-
15	5545341	WASHER M10 x Ø20 FLAT	8	-

NEXT ASSEMBLY
5260248

DO NOT SCALE DRAWING

	NAME	DATE
DRAWN	TM	12/18/2019
CHECKED	OR	11/12/2020

DIMENSIONS ARE IN MM

THIRD ANGLE PROJECTION

PROPRIETARY AND CONFIDENTIAL
THE INFORMATION CONTAINED IN THIS DRAWING IS THE SOLE PROPERTY OF BENDPAK INC. ANY REPRODUCTION IN PART OR AS A WHOLE WITHOUT THE WRITTEN PERMISSION OF BENDPAK INC. IS PROHIBITED.

BendPak
1645 LEMONWOOD DR.
SANTA PAULA, CA 93060

TITLE: HDS-40X LIFT SUPERSTRUCTURE

SIZE	DWG. NO.	REV
A	5245092	C

SCALE: 1:60 | SHEET 1 OF 1

UKAS INSPECTION
6038

EC Type-Examination Certificate

(Fm 210-017, Rev.10)

For the requirements of the Machinery Directive 2006/42/EC

For Annex IV machinery

Certificate No.: CE-C-20120209-01-06-5B
Date of first issue: 2014.01.27
Date of last review: 2019.01.27
Date of next review: 2024.01.26

NAME AND ADDRESS OF THE MANUFACTURER:	Bendpak Inc. 1645 E. Lemonwood Drive, Santa Paula, CA, United States of America
PRODUCT DESCRIPTION/ TYPE AND MODEL:	Range of 18,000lb (8165kg) 4 post vehicle servicing lifts HDS-18E 154W x 297L x 93H in Range of 27,000lb (12247kg) 4 post vehicle servicing lifts HDS-27 154W x 295L x 60H in HDS-27X 154W x 356L x 60H in Range of 35,000lb (15876kg) 4 post vehicle servicing lifts HDS-35 154W x 257L x 60H in HDS-35X 154W x 357L x 60H in
APPLICABLE STANDARDS:	EN1493:2010 Vehicle Lifts EN 60204-1:2006+A1:2009 Safety of machinery - Electrical equipment of machines - Part1:General requirements
A COPY IS AVAILABLE FROM:	CCQS UK Ltd., 5 Harbour Exhange, London, E14 9GE, UK
SUBJECT TO THESE CONDITIONS:	A Rolling Jack is not included in this certification.
RE-ISSUE HISTORY	CE-C-20120209-01-06-5A first issue CE-C-20120209-01-06-5B this issue – Review of original certification HDS-18 renamed to HDS-18E, HDS-18X removed

The technical file, accompanying documentation and the equipment which they describe have been found to be in compliance with the requirements of the Machinery Directive 2006/42/EC.

The responsible person defined above has responsibility for ensuring that all future serial manufacture of the machinery conforms to the sample submitted for EC type-examination referenced above.

Any changes to the design of the machinery certified here must be advised to CCQS UK Ltd. for re-assessment.

A CE marking should not be fixed to the equipment until the requirements of all relevant directives have been met.

Approved by: ***Owen Bian – Office Manager*** **Date: 2019.01.27**

Appointed by UK Government
as a Notified Body
for CE Marking No. 1105

CCQS UK Ltd.,
5 Harbour Exhange, Canary Wharf,
London, E14 9GE, UK
Tel: +44 (0) 20 7868 1509
Email info@ccqs.co.uk
If in any doubt about the integrity of this certificate, please verify it on our website at **http://www.ccqs.co.uk**

CE

6038

EC Type-Examination Certificate

(Fm 210-017, Rev.10)

For the requirements of the Machinery Directive 2006/42/EC

For Annex IV machinery

Certificate No.: CE-C-20120209-01-14-5A
Date of first issue: 2019.05.30
Date of next review: 2024.05.30

NAME AND ADDRESS OF THE MANUFACTURER:	Bendpak Inc. 1645 E. Lemonwood Drive, Santa Paula, CA, United States of America
PRODUCT DESCRIPTION/ TYPE AND MODEL:	Range of 40,000lb (18143kg) 4 post lifts HDS-40 HDS-40X
APPLICABLE STANDARDS:	EN1493:2010 Vehicle Lifts EN 60204-1:2006+A1:2009 Safety of machinery - Electrical equipment of machines - Part1:General requirements
A COPY IS AVAILABLE FROM:	CCQS UK Ltd., 5 Harbour Exhange, London, E14 9GE, UK
RE-ISSUE HISTORY	CE-C-20120209-01-13-5A first issue

The technical file, accompanying documentation and the equipment which they describe have been found to be in compliance with the requirements of the Machinery Directive 2006/42/EC.

The responsible person defined above has responsibility for ensuring that all future serial manufacture of the machinery conforms to the sample submitted for EC type-examination referenced above.

Any changes to the design of the machinery certified here must be advised to CCQS UK Ltd. for re-assessment.

A CE marking should not be fixed to the equipment until the requirements of all relevant directives have been met.

Approved by: ***Owen Bian – Office Manager*** **Date: 2019.05.30**

Appointed by UK Government
as a Notified Body
for CE Marking No. 1105

CCQS UK Ltd.,
5 Harbour Exhange, Canary Wharf,
London, E14 9GE, UK
Tel: +44 (0) 20 7868 1509
Email info@ccqs.co.uk

If in any doubt about the integrity of this certificate, please verify it on our website at **http://www.ccqs.co.uk**

ZERTIFIKAT ◆ CERTIFICATE ◆ 認証書 ◆ СЕРТИФИКАТ ◆ CERTIFICADO ◆ CERTIFICAT

CE Declaration of Conformity

The equipment which accompanies this declaration is in conformity with EU Directive: 2006/42/EC Machinery Directive

Manufacturer
BendPak Inc.
1645 Lemonwood Dr.
Santa Paula, CA 93060,
USA

A copy of the technical file for this equipment is available from:
CCQS UK Ltd.,
level 7, Westgate House, Westgate Rd.,
London W5 1YY UK

Description of Equipment
Vehicle Servicing Lifts

Model	Capacity (lb)	Design	Width(in)	Legth(in)	Max Lift(in)
HDS-18	18,000	4 Post	154	247	60
HDS-18X	18,000	4 Post	154	363	60
HDS-27	27,000	4 Post	154	297	60
HDS-27X	27,000	4 Post	154	357	60
HDS-35	35,000	4 Post	154	297	60
HDS-35X	35,000	4 Post	154	357	60

A sample of this machinery has been presented to Notified Body number 1105.
CCQS UK Ltd., level 7, Westgate House, Westgate Rd., London W5 1YY UK
Who have issued an EC-type examination certificate
Number CE-GB-20120209-01-06-5A dated 2014.01.27

The equipment in respect of which this declaration is made conforms to the example to which that certificate relates, and that certificate remains valid.

The following harmonised standards have been used:-
EN 1493:2010 Vehicle Lifts

Authorised signatory of manufacturer

Signature: _____

Name of signatory: Jeff Kritzer
Position in company: SVP Sales/Marketing

Place signed: Santa Paula CA
Date signed: 11.6.2013

For Parts Or Service
Contact:

BendPak Inc. / Ranger Products
1645 Lemonwood Dr.
Santa Paula, CA. 93060

Tel: 1-805-933-9970
Toll Free: 1-800-253-2363
Fax: 1-805-933-9160

www.bendpak.com

pn# 5900160

BendPak® PROVIDING AUTOMOTIVE SERVICE SOLUTIONS

Ranger™ PRODUCTS