# Illustration—Ram (50274163)

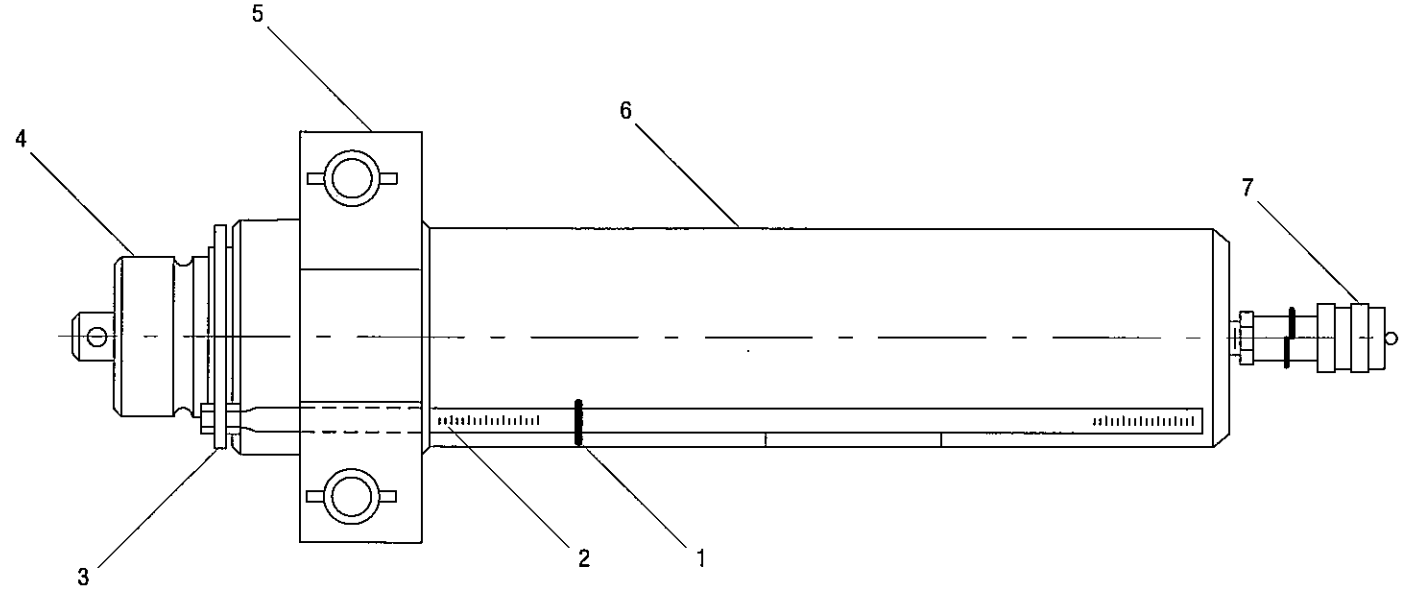


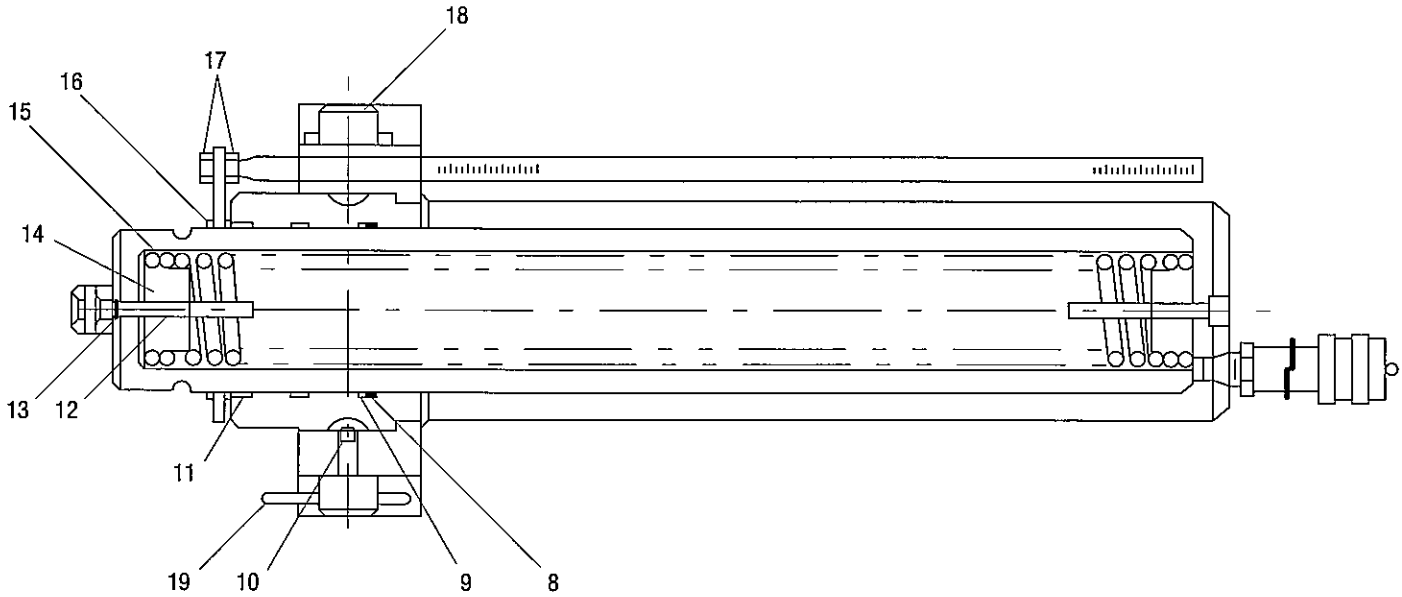

# Parts List—Ram (50274163)

| Key | Part No. | Description | Qty |
|---|---|---|---|
| 1 | 90528670 | O-ring, .437 x .625 x .093 | 1 |
| 2 | 50219480 | Scale, piston | 1 |
| 3 | 50219499 | Bracket, scale | 1 |
| 4 | 50162667 | Piston, hydraulic | 1 |
| 5 | 50274171 | Block, cylinder | 1 |
| 6 | 50162675 | Cylinder, hydraulic | 1 |
| 7 | 90508076 | Coupler, quick, 3/8" female | 1 |
| 8 | 90508300 | O-ring, 3.25 x 3.62 x .187 | 1 |
| 9 | 90508297 | Back-up ring, spiral, 3.25 x 3.62 x .185 | 1 |
| 10 | 90522176 | Screw, set, 3/8–16 x .500 socket | 1 |
| 11 | 50172050 | Liner, cylinder | 1 |
| 12* | 50106708 | Screw, tension spring | 2 |
| 12A* | 50031406 | Screw, tension spring | 2 |
| 13* | 50034200 | Washer, flat, .321 x .428 x .040 nylon | 2 |
| 13A* | 50134965 | Washer, flat, .321 x .460 x .040 nylon | 2 |
| 14 | 50106627 | Retainer, spring | 2 |
| 15 | 50106619 | Spring, extension, 1.70 x 2.33 x 16.6 | 1 |
| 16 | 52060457 | Ring, retaining, 3.25 Truarc | 2 |
| 17 | 90508483 | Nut, hex, 3/8–24 light jam | 2 |
| 18 | 50273817 | Pin unit, cylinder block, 1.13 x 10.2 (includes Key 19) | 2 |
| 19 | 90503023 | Clip, hitch pin #8 | 2 |
| | 50235605 | Decal (not shown) | 1 |
| | 50343165 | Decal, read IM (not shown) | 1 |
| | 50354990 | Decal, warning (not shown) | 1 |
| | 50137972 | Packing kit, repair (includes 8, 9, 13, and 13A) | |
| | | Items 12 and 13 were used prior to April 1997; items 12A and 13A have been used since April 1997. Use 12A and 13A if possible. | |