MASTER COPY

ENERPAC

Repair Parts Sheet

JSH-202, JSH-302, JSH-603, JSH-1003

SPECIFICATIONS	JSH-202	JSH-302	JSH-603	JSH-1003
Rated Capacity	20 Ton	30 Ton	60 Ton	100 Ton
Plunger Stroke	2"	2-1/2"	3"	3"
Hyd. Pressure (Maximum)	8475 PSI	8320 PSI	9055 PSI	9709 PSI

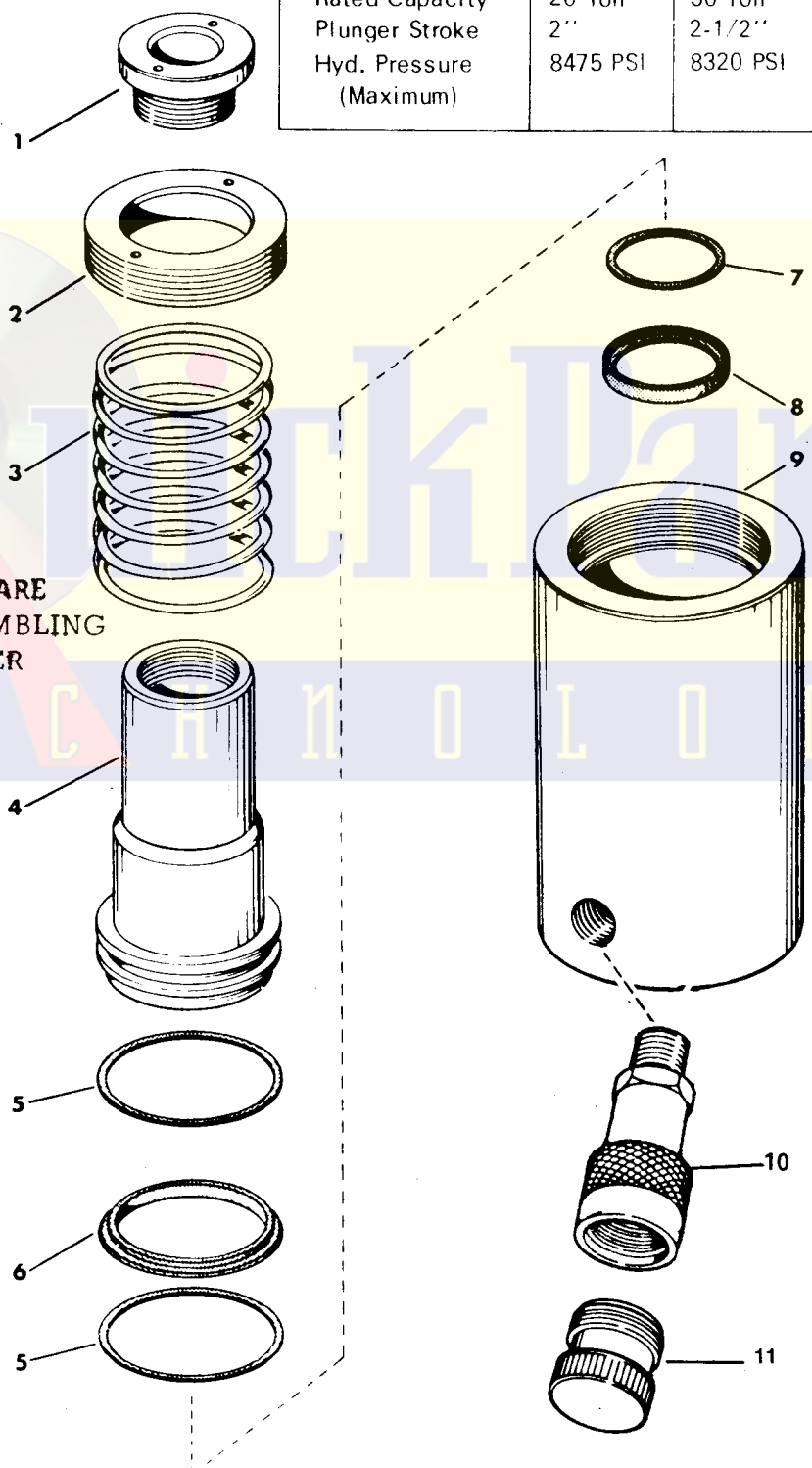

CAUTION:

USE EXTREME CARE WHEN DISASSEMBLING SPRING IS UNDER COMPRESSION.

QuickParts TECHNOLOGY

TO PROTECT YOUR WARRANTY, USE ONLY ENERPAC HYDRAULIC OIL.

PARTS LIST

Item No.	Description	Qty.	Model No. JSH-202	Model No. JSH-302	Model No. JSH-603	Model No. JSH-1003
1	Saddle (Smooth Hollow)	1	PSM17	PSM30	PSM50	- - - - - -
	Saddle (Threaded Hollow)	(A)	PST17	PST30	PST50	BSS1746D
	Saddle (Solid Serrated)	(A)	HP2026	HP3026	HP5027	- - - - - -
2	Stop Ring	1	B497044	B498044	L825044	BSS1794D
3	Spring	1	B280110	B289110	B302110	BSS1796D
4	Plunger	1	B500040	B501040	Y115040	BSS1793D
5	Back-up Ring	2	*	*	*	*
6	Packing	1	*	*	*	*
7	Back-up Ring	1	*	*	*	*
8	Packing	1	*	*	*	*
9	Cylinder (JSH-202, 302, 603)	1	B275900	B286900	Y118900	BSS1792D
10	Coupler	1	CHF-375	CHF-375	CHF-375	CHF-375
11	Dust Cap	1	CHD-375	CHD-375	CHD-375	CHD-375
	Decal	1	*	*	*	*
*	Cylinder Packing Kit (Includes starred (*) items)	1	RCH-202K	RCH-302K	RCH-603K	RCH-1003K

(A) Optional Attachments - Order through nearest ENERPAC Distributor
(B) High-Flow Half Coupler now standard on all these cylinders

QuickParts TECHNOLOGY

***NOTE:** Orders for parts cannot be filled unless both model and serial number with prefix imprinted on nameplate are given.*

PARTS AND SERVICE

For quality workmanship and genuine ENERPAC parts, select a Franchised ENERPAC Service Depot for your repair needs.

Only repairs performed by a Franchised Service Depot displaying the official ENERPAC Franchised sign are backed with full factory warranty.

The Classified Section in your Phone Book lists your nearest Franchised Service Depot.

WARRANTY

ENERPAC warrants its products against defects in workmanship and materials for 90 days from date of delivery to user. Chain is not warranted.

Warranty does not cover ordinary wear and tear, abuse, misuse, overloading, altered products or use of improper fluid.

WARRANTY RETURN PROCEDURE

When question of warranty claim arises, the user should send his unit to the nearest ENERPAC Franchised Service Depot for inspection, transportation to be prepaid and evidence of purchase date furnished. If the claim comes under the terms of our warranty, the Franchised Service Depot will REPAIR OR REPLACE PARTS AFFECTED and return prepaid.

ENERPAC®

AN APPLIED POWER® INDUSTRY

ENERPAC, BUTLER, WISCONSIN 53007 DIVISION OF APPLIED POWER INC. TELEPHONE (414) 781-6600 TELEX 026-682

© APPLIED POWER INC. 1975

PRINTED IN U.S.A. MARCAS REGS. L-626