• Operating Manual • Warning Information • Parts List

## SPECIFICATIONS

| | |
|---|---|
| Capacity | 3.5 Ton |
| Low Height | 3.5" |
| Raised Height | 20.25" |
| Length | 29.75" |
| Chassis Width | 14.2" |
| Saddle Diameter | 4.7" |
| Shipping Weight | 105.6 Lbs. |

# CSEFJ350BK -BL, -NG, -RD, -RG

## 3-1/2 Ton Floor Jack

Copyright © Professional Tool Products, 2015,
All rights reserved

# WARNING INFORMATION

This is the safety alert symbol. It is used to alert you to potential personal injury hazards. Obey all safety messages that follow this symbol to avoid possible injury or death.

**⚠WARNING**

**WARNING:** Indicates a hazardous situation which, if not avoided, could result in death or serious injury.

## IMPORTANT: READ THESE INSTRUCTIONS BEFORE OPERATING

BEFORE USING THIS DEVICE, READ THIS MANUAL COMPLETELY AND THOROUGHLY, UNDERSTAND ITS OPERATING PROCEDURES, SAFETY WARNINGS AND MAINTENANCE REQUIREMENTS.

It is the responsibility of the owner to make sure all personnel read this manual prior to using the device. It is also the responsibility of the device owner to keep this manual intact and in a convenient location for all to see and read. If the manual or product labels are lost or not legible, contact Cornwell for replacements. If the operator is not fluent in English, the product and safety instructions shall be read to and discussed with the operator in the operator's native language by the purchaser/owner or his designee, making sure that the operator comprehends its contents.

## THE NATURE OF HAZARDOUS SITUATIONS

**⚠WARNING**

The use of portable automotive lifting devices is subject to certain hazards that cannot be prevented by mechanical means, but only by the exercise of intelligence, care, and common sense. It is therefore essential to have owners and personnel involved in the use and operation of the equipment who are careful, competent, trained, and qualified in the safe operation of the equipment and its proper use. Examples of hazards are dropping, tipping or slipping of loads caused primarily by improperly securing loads, overloading, off-centered loads, use on other than hard level surfaces, and using equipment for a purpose for which it was not designed.

## METHODS TO AVOID HAZARDOUS SITUATIONS

**⚠WARNING**

- Read, study, understand and follow all instructions before operating this device.
- Inspect the jack before each use. Do not use jack if damaged, altered, modified, in poor condition, leaking hydraulic fluid, or unstable due to loose or missing components. Make corrections before using.
- Lift only on areas of the vehicle as specified by the vehicle manufacturer.
- Wear eye protection that meets ANSI Z87.1 and OSHA standards, users and bystanders.
- Do not use jack beyond its rated capacity. Do not shock load.
- **This is a lifting device only. Immediately after lifting, support the vehicle with jack stands capable of sustaining the load before working on the vehicle.**
- Use only on a hard level surface free from obstructions so the jack is free to reposition itself during lifting and lowering operations.
- Center load on saddle. Be sure setup is stable before working on vehicle.
- Do not move or dolly the vehicle while on the jack.
- Do not use any materials that may serve as risers, spacers or extenders between the stock lifting saddle and the load.
- Do not use any adaptors that replace the stock lifting saddle unless approved or supplied by the jack manufacturer.
- Do not use (or modify) this product for any other purpose than that for which it was designed without consulting the manufacturer's authorized representative.
- Always lower the jack slowly and carefully.
- This product may contain one or more chemicals known to the State of California to cause cancer and birth defects or other reproductive harm. *Wash hands thoroughly after handling*.
- Failure to heed these warnings may result in serious or fatal personal injury and/or property damage.

## CONSEQUENCES OF NOT AVOIDING HAZARDOUS SITUATIONS

**⚠WARNING**

Failure to read this manual completely and thoroughly, understand its OPERATING INSTRUCTIONS, SAFETY WARNINGS, MAINTENANCE INSTRUCTIONS and not comply with them, and neglecting the METHODS TO AVOID HAZARDOUS SITUATIONS could cause accidents resulting in serious or fatal personal injury and/or property damage.

# CSEFJ350BK, -BL, -NG, -RD, - RG 3-1/2 TON FLOOR JACK

## OWNER/USER RESPONSIBILITY

The owner and/or user must have an understanding of the manufacturer's operating instructions and warnings before using this jack. Personnel involved in the use and operation of equipment shall be careful, competent, trained, and qualified in the safe operation of the equipment and its proper use when servicing motor vehicles and their components. Warning information should be emphasized and understood. If the operator is not fluent in English, the manufacturer's instructions and warning shall be read to and discussed with the operator in the operator's native language by the purchaser/owner, making sure that the operator comprehends its contents. Owner and/or user must study and maintain for future reference the manufacturers' instructions. Owner and/or user is responsible for keeping all warning labels and instruction manuals legible and intact. Replacement labels and literature are available from the manufacturer.

## INSPECTION

Visual inspection should be made before each use of the jack, checking for leaking hydraulic fluid and damaged, loose or missing parts. Each jack must be inspected by a manufacturer's repair facility immediately, if subjected to an abnormal load or shock. Any jack which appears to be damaged in any way, is found to be badly worn, or operates abnormally MUST BE REMOVED FROM SERVICE until necessary repairs are made by a manufacturer's authorized repair facility. It is recommended that an annual inspection of the jack be made by a manufacturer's authorized repair facility and that any defective parts, decals or warning labels be replaced with manufacturer's specified parts. A list of authorized repair facilities is available from the manufacturer.

## SETUP

Please refer to the exploded view drawing on page 5 in this manual in order to identify parts:

1. Remove the 2-piece handle from box. Insert narrow portion of top section (7) into bottom section (8) and secure with handle button (21).
2. Grease the inside of the handle yoke (11) and remove the handle set screw (10) from the yoke (11). Insert the handle all the way in the handle yoke (11) until it engages the universal joint assembly (13). Secure the handle to the handle yoke (11) with the handle set screw (10).
3. Air may become trapped in the hydraulic system during shipping and handling. Trapped air will affect the pumping performance of the jack. If this occurs, follow the air purging procedure below:
   a) Rotate the handle. in a clockwise direction until tight. Rotate the handle in a counterclockwise direction two complete revolutions.
   b) Pump the handle approximately 10-15 complete pump strokes.
   c) Rotate the handle in a clockwise direction until tight. Proceed to pump the jack to maximum lift height.
   d) Repeat steps a) and c) until all air has been purged from the system.

## OPERATION

This is the safety alert symbol used for the **OPERATING INSTRUCTIONS** section of this manual to alert you to potential personal injury hazards. Obey all instructions to avoid possible injury or death. **IMPORTANT:** Before attempting to raise any vehicle, check vehicle service manual for recommended lifting surfaces.

1. **To raise load:** Turn the handle in a clockwise direction until tight. Position the jack under the load. Proceed to pump the handle in order to raise the lift arm to the load. As the saddle at the end of the lift arm gets closer to the load, reposition the jack so the saddle will contact the load firmly and the load is centered on the saddle. Make sure the saddle is correctly positioned. Raise the load to the desired work height. Place jack stands of appropriate capacity at the vehicle manufacturers's recommended support areas that provide stable support for the raised vehicle. **DO NOT CRAWL UNDER VEHICLE WHILE LIFTING VEHICLE OR PLACING OR REMOVING THE JACK STANDS!** Once jack stands are positioned, turn the handle VERY SLOWLY. Lower the load to rest on the jack stands. Inspect the relationship between the jack stands and load to make sure the setup is stable and safe. If the setup is not stable or safe, follow the preceding steps until corrected.
2. **To lower load:** Follow the procedures mentioned in "To raise load" section of the **OPERATING INSTRUCTIONS** in order to raise the load off the jack stands. Once the load has cleared the jack stands, remove the stands from under the load and away from the work area. Turn handle very slowly in a counterclockwise direction until the load is completely lowered to the ground. Once the jack's lifting saddle has cleared the load, remove the jack from under the load. CAUTION: Keep hands and feet away from the hinge mechanism of the jack. **DO NOT CRAWL UNDER VEHICLE WHILE LIFTING VEHICLE OR PLACING OR REMOVING THE JACK STANDS!**

## PREVENTATIVE MAINTENANCE

This is the safety alert symbol used for the PREVENTATIVE MAINTENANCE section of this manual to alert you to potential personal injury hazards. Obey all instructions to avoid possible injury or death.

1. Always store the jack in a well protected area where it will not be exposed to inclement weather, corrosive vapors, abrasive dust, or any other harmful elements. The jack must be cleaned of water, snow, sand, grit, oil, grease or other foreign matter before using.
2. The jack must be lubricated periodically in order to prevent premature wearing of parts. A general purpose grease must be applied to all zerk grease fittings, caster wheels, front axle, elevator arm, handle base pivot bolts, release mechanism and all other bearing surfaces. Worn parts resulting from inadequate or no lubrication are not eligible for warranty consideration. See page 6 for lubrication instructions.
3. It should not be necessary to refill or top off the reservoir with hydraulic fluid unless there is an external leak. An external leak requires immediate repair which must be performed in a dirt-free environment by an authorized service center.

**IMPORTANT:** In order to prevent seal damage and jack failure, never use alcohol, hydraulic brake fluid or transmission oil in the jack. Use Chevron Hydraulic Oil AW ISO 32, its equivalent Unocal Unax AW 150 or hydraulic jack oil.

4. Every jack owner is responsible for keeping the jack labels clean and readable. Use a mild soap solution to wash external surfaces of the jack but not any moving hydraulic components.
5. Inspect the jack before each use. Do not use the jack if any component is cracked, broken, bent, shows sign of damage or leaks hydraulic fluid. Do not use the jack if it has loose or missing hardware or components, or is modified in any way. Take corrective action before using the jack again.
6. Any hydraulic repairs within the warranty period must be performed by an authorized service center.

## PROPER STORAGE

It is recommended that the jack be stored in a dry location with all wheels touching the ground on a relatively level surface.

## TROUBLESHOOTING

**Important:** Service jacks are self-contained devices used for lifting, but not sustaining, a partial vehicular load. In accordance with ASME-PALD Load Sustaining Test: "A load not less than the rated capacity…shall not lower more than 1/8" (3.18mm) in the first minute, nor a total of .1875" (4.76mm) in 10 minutes." Lowering within this range is considered normal operation and is NOT a warrantable defect.

| PROBLEM | ACTION |
|---|---|
| 1. Unit will not lift rated load. | Purge air from hydraulic system by following procedure under SETUP. |
| 2. Unit will not sustain rated load or feels "spongy" under rated load. | Purge air from hydraulic system as above. |
| 3. Unit will not lift to full height. | Purge air from hydraulic system as above. |
| 4. Handle tends to raise up while the unit is under rated load. | Pump the handle rapidly several times to push oil past ball valves in power unit. |
| 5. Unit still does not operate. | Contact Cornwell authorized hydraulic service center. |

## WARRANTY COVERAGE

Cornwell Quality Tools Company ("Cornwell") warrants against defects in the hydraulic pump on this product for a period of TWO (2) YEARS from the date of original retail purchase. Cornwell Quality Tools Company ("Cornwell") warrants against defects in the balance of components on this product for a period of 90 days from the date of original retail purchase. Subject to the conditions and limitations set forth below, Cornwell will, at its option, either repair or replace any part of the product(s) that proves defective by reason of improper workmanship or materials.

This warranty does not cover any damage to this product that results from accident, abuse, misuse, natural or personal disaster, or any unauthorized disassembly, repair, or modification. Repairs, disassembly and modification are only authorized to be made by Cornwell or a warranty service center approved by Cornwell.

WARRANTY SERVICE

To obtain warranty service, contact your Cornwell dealer.

**EXCLUSIONS AND LIMITATIONS**

THIS WARRANTY AND THE REMEDIES SET FORTH ABOVE ARE EXCLUSIVE AND IN LIEU OF ALL OTHER WARRANTIES, REMEDIES AND CONDITIONS, WHETHER ORAL OR WRITTEN, EXPRESS OR IMPLIED. CORNWELL SPECIFICALLY DISCLAIMS ANY AND ALL IMPLIED WARRANTIES, INCLUDING, TO THE EXTENT PERMITTED BY APPLICABLE LAW, ANY WARRANTIES OF MERCHANTABILITY AND FITNESS FOR A PARTICULAR PURPOSE. IF CORNWELL CANNOT LAWFULLY DISCLAIM IMPLIED WARRANTIES UNDER THIS LIMITED WARRANTY, ALL SUCH IMPLIED WARRANTIES ARE LIMITED IN DURATION TO THE DURATION OF THIS WARRANTY. IN NO EVENT SHALL CORNWELL BE LIABLE TO THE PURCHASER OR TO THE USER OF A CORNWELL PRODUCT FOR ANY SPECIAL, INCIDENTAL OR CONSEQUENTIAL DAMAGES BASED UPON BREACH OF WARRANTY, BREACH OF CONTRACT, NEGLIGENCE, TORT, OR ANY OTHER LEGAL THEORY. SUCH DAMAGES INCLUDE, WITHOUT LIMITATION, EXPENSES, LOST REVENUES, LOST SAVINGS, LOST PROFITS, OR ANY OTHER INCIDENTAL OR CONSEQUENTIAL DAMAGES ARISING FROM THE PURCHASE, USE OR INABILITY TO USE THE CORNWELL PRODUCT.

Some states do not allow the exclusion or limitation of incidental or consequential damages or exclusions or limitation on the duration of implied warranties or conditions, so the above limitations or exclusions may not apply to you. This warranty gives you specific legal rights, and you may also have other rights that vary by state.

Repair kits and replacement parts are available for many Cornwell products, regardless of whether or not the product is still covered by awarranty plan.

# PARTS

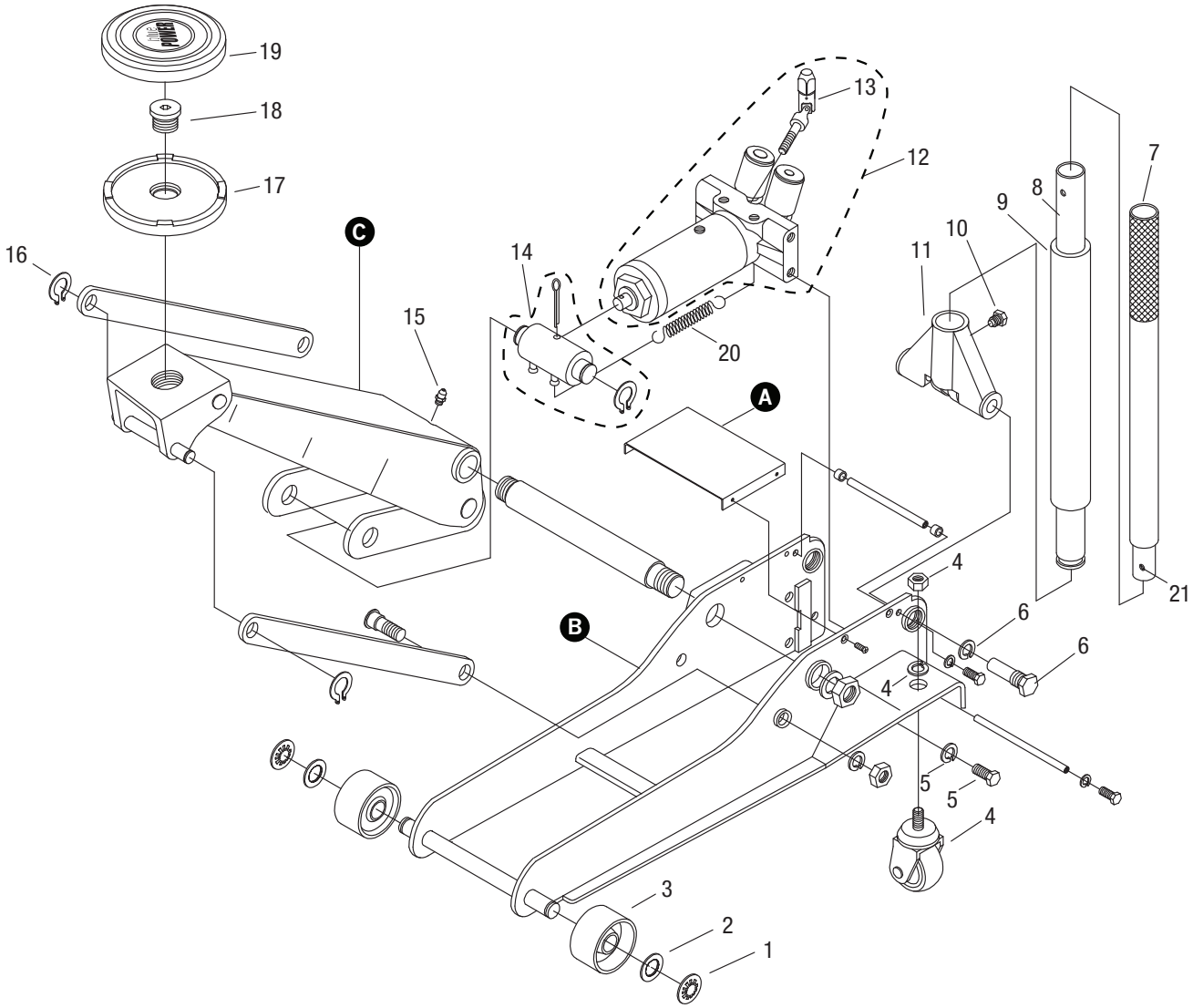


| Item No. | Part No. | Description | Qty. |
|---|---|---|---|
| 1 | RS35T01 | Star Clip | 2 |
| 2 | RS35T02 | Washer (M20) | 2 |
| 3 | RS35B03 | Front Wheel | 2 |
| 4 | RS35B10 | Rear Caster Assy. | 2 |
| 5 | RS35T08 | Hex Nut & Lock Washer (M16) | 2 |
| 6 | RS35B11 | Yoke Retaining Bolt & Washer | 2 |
| 7 | RS35T17BK | Upper Handle Lever "B" | 1 |
| 8 | RS35T15BK | Lower Handle Lever "A" | 1 |
| 9 | RS35010C | Handle Bumper | 1 |
| 10 | RS35T13 | Set Screw - Handle | 1 |
| 11 | RS35011BK | Handle Yoke Black | 1 |
| | RS35011BL | Handle Yoke Blue | 1 |
| | RS35011NG | Handle Yoke Neon Green | 1 |
| | RS35011RD | Handle Yoke Red | 1 |
| | RS35011RG | Handle Yoke Orange | 1 |
| 12 | RS35012 | Power Unit Assy. Complete | 1 |
| 13 | RS35T18 | Universal Joint Assy. | 1 |
| 14 | RS35B24 | Block Linkage (incl. Split Pin, Ret. Rings) | 1 |

| Item No. | Part No. | Description | Qty. |
|---|---|---|---|
| 15 | RS35T12 | Grease Fitting | 1 |
| 16 | RS35T04 | Retaining Ring | 2 |
| 17 | RS35017 | Saddle | 1 |
| 18 | RS35018 | Saddle Screw | 1 |
| 19 | RS35020C | Rubber Saddle Pad | 1 |
| 20 | RS35T19 | Return Spring | 2 |
| 21 | RS35THB | Handle Button (not shown) | 1 |
| A | | Power Unit Cover | 1 |
| B | | Main Frame | 1 |
| C | | Lift Arm | 1 |

Only items identified by part number are available for purchase.

# CSEFJ350BK, -BL, -NG, -RD, - RG 3-1/2 TON FLOOR JACK

## HYDRAULIC JACK MAINTENANCE GUIDE

**IMPORTANT:** Service jacks are designed for lifting purposes only; always support raised load with jack stands.

### REGULAR MAINTENANCE

• MONTHLY or as necessary (depending on usage)

✻ 1. Using a grease gun, add grease to grease fitting in the lift arm pivot shaft.
(Use a multi-purpose NLGI type grease only.)

✻ 2. Lubricate all linkages and pivot points.
(Use white lithium spray grease only.)

3. Remove handle; lubricate handle receptacle and handle end.
(Use white lithium spray grease only.)

✻ 4. Lubricate both rear casters, bearing and both front wheels.
(Use white lithium spray grease only.)

5. Tighten all accessible hardware.

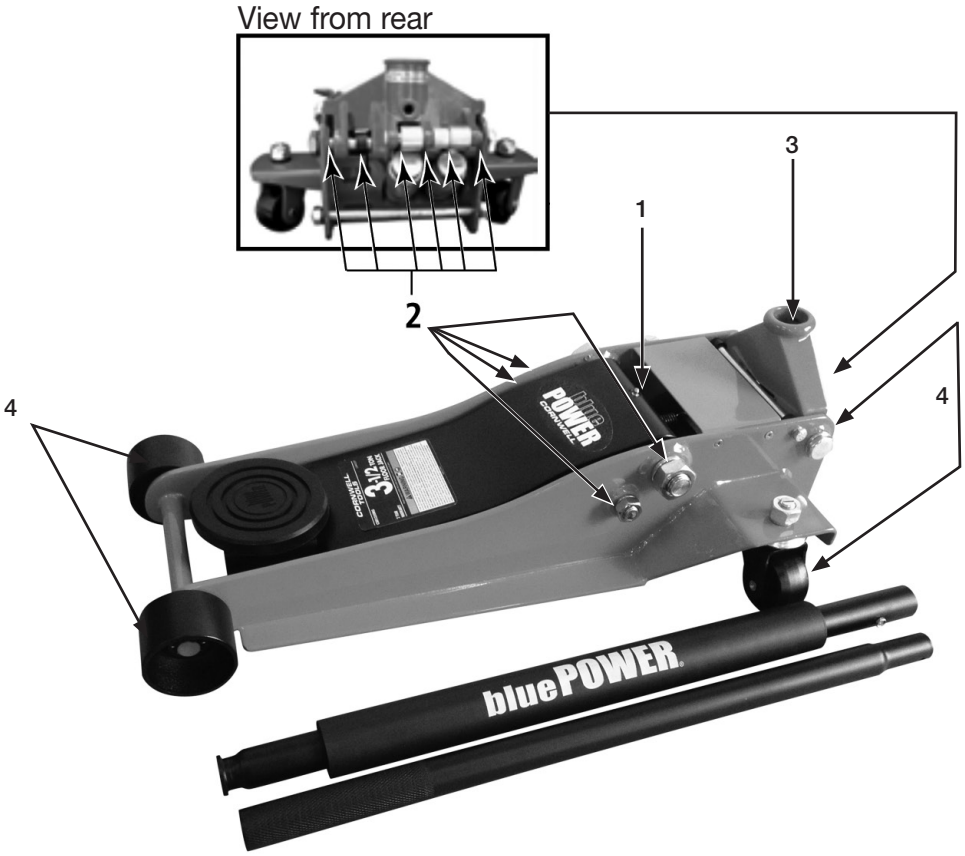


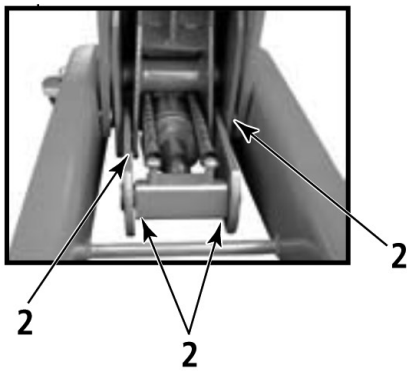


✻ **Numbers shown in this illustration match the step numbers above (Regular Maintenance)**

**NOTE:** Premature wearing of parts or components caused by loose or missing hardware that have not been replaced or tightened in a correct and timely manner are not eligible for warranty consideration.