Central Hydraulics®

8 TON

AIR/HYDRAULIC LONG RAM JACK

Model 94562

SET UP AND OPERATING INSTRUCTIONS

Visit our website at: http://www.harborfreight.com

Read this material before using this product. Failure to do so can result in serious injury. SAVE THIS MANUAL.

Copyright© 2006 by Harbor Freight Tools®. All rights reserved. No portion of this manual or any artwork contained herein may be reproduced in any shape or form without the express written consent of Harbor Freight Tools. Diagrams within this manual may not be drawn proportionally. Due to continuing improvements, actual product may differ slightly from the product described herein. Tools required for assembly and service may not be included.

For technical questions or replacement parts, please call 1-800-444-3353.

Revised Manual 10d

SPECIFICATIONS

Lifting Capacity	8 Tons (16,000 Pounds)
Required Air Pressure	110 ~ 120 PSI
Air Flow Required	7 CFM
Air Inlet Size	1/4" – 18 NPT
Minimum Height	24-1/4"
Maximum Height	42-7/8"

Ram Diameter	1.33"
Stroke	18-5/8"
Ram Mounting Holes	5/8" Diameter
Handle Length	20"
Hose Length	48"
Unit Weight	36 Pounds

Save This Manual

You will need this manual for the safety warnings and precautions, assembly, operating, inspection, maintenance and cleaning procedures, parts list and assembly diagram. Keep your invoice with this manual. Write the invoice number on the inside of the front cover. Keep this manual and invoice in a safe and dry place for future reference.

UNPACKING

When unpacking, check to make sure all the parts shown in the **Parts Lists on pages 11 and 12** are included. If any parts are missing or broken, please call Harbor Freight Tools at the number shown on the front cover of this manual as soon as possible.

GENERAL SAFETY RULES

IMPORTANT SAFETY INSTRUCTIONS

⚠ WARNING!

READ AND UNDERSTAND ALL INSTRUCTIONS
Failure to follow all instructions detailed in this manual may result in serious personal injury.
SAVE THESE INSTRUCTIONS

Work Area

1. **Keep your work area clean and well lit.** Cluttered and dark work areas invite accidents.

2. **Keep bystanders, children, and visitors away while using the Long Ram Jack.** Distractions can cause you to lose control.

Personal Safety

1. **Stay alert.** Watch what you are doing, and use common sense during use. Do not use the Long Ram Jack while tired or under the influence of drugs, alcohol,

or medication. A moment of inattention while operating power tools may result in serious personal injury.

2. **Dress properly.** Do not wear loose clothing or jewelry. Contain long hair. Keep your hair, clothing, and gloves away from moving parts. Loose clothes, jewelry, or long hair can be caught in moving parts.

3. **Do not overreach.** Keep proper footing and balance at all times. Proper footing and balance enables better control in unexpected situations.

4. **Always wear eye and hand protection.** Wear ANSI-approved safety impact goggles, non-skid safety shoes, and heavy duty work gloves when using this product.

Tool Use and Care

1. **Store idle tools and equipment out of reach of children and other untrained people.** Tools and equipment are dangerous in the hands of untrained users.

2. **Maintain the Long Ram Jack with care.** Keep this product clean. A properly maintained tool is easier to control. Do not use damaged tools and equipment. Tag damaged tools and equipment “Do not use” until repaired.

3. **Check for misalignment or binding of moving parts, loose or broken parts, and any other condition that may affect the Long Ram Jack’s operation.** If damaged, have the tool serviced before using. Many accidents are caused by poorly maintained tools and equipment.

4. **Use only accessories that are recommended by the manufacturer for your model.** Accessories that may be suitable for one product may become hazardous when used on another product.

Service

1. **Tool service must be performed only by qualified service technician.** Service or maintenance performed by unqualified personnel could result in a risk ofinjury.

2. **When servicing the Long Ram Jack, use only identical replacement parts.** Follow instructions in the *“Inspection, Maintenance, And Cleaning”* section of this manual. Use of unauthorized parts or failure to follow maintenance instructions may create a risk of electric shock or injury.

SPECIFIC SAFETY RULES

1. **Prior to assembling the Long Ram Jack onto a shop crane, make sure to read and understand all instructions and safety precautions as outlined in the shop crane manufacturer's manual.** Make sure the Long Ram Jack is fully compatible with the shop crane.

2. **WARNING! Do not exceed the maximum lifting capacity of this Long Ram Jack (8 tons / 16,000 pounds).** Exceeding the maximum lifting capacity could cause personal injury and/or property damage.

3. **Maintain labels and nameplates on the Long Ram Jack.** These carry important information. If unreadable or missing, contact Harbor Freight Tools for a replacement.

4. **Use the right product for the job.** There are certain applications for which this product was designed. Do not use this product for a purpose for which it was not intended.

5. **WARNING!** The Long Ram Jack mounting holes are **5/8"** diameter. **Do not attempt to drill or alter the mounting holes.**

6. **WARNING!** The two **5/8" diameter Pins** (not included) used to attach the Long Ram Jack to a shop crane must be rated to support at least **8 tons (16,000 pounds)** of pressure and must have **R-Pins** (not included) to lock the two Pins in place.

7. **Do not use the Long Ram Jack in an unsupported application.** Twisting or sideways forces could cause the Jack to unexpectedly fail.

8. **The Long Ram Jack is designed for short-term lifting of loads.** Do not use for extended lifting of loads.

9. **Stay clear of a shop crane.** Never go under an object being lifted by the crane. It is possible for an object to fall, possibly resulting in serious injury and/or property damage.

10. **Immediately after lifting, support the load with appropriate supporting equipment such as jack stands** (not included) **of adequate capacity. DO NOT work under a load which is supported only by the Long Ram Jack.**

11. **Use the Long Ram Jack with a shop crane only on a flat, level, solid surface capable of supporting the weight of the Jack, crane and the weight of the object being lifted.**

12. **Industrial applications must follow OSHA requirements.**

13. **Always monitor the object being lifted so it does not rock back and forth.**

14. **Before lowering a load, make sure there are no obstructions underneath and that all other personnel are standing clear.**

15. **Do not attempt to move a load while it is supported by the Long Ram Jack.** The Jack must only be used in a static position for lifting and lowering loads.

16. **Compressed air only.** Use clean, dry, regulated, compressed air between **110 and 120 PSI**. Never use oxygen, carbon dioxide, combustible gases, or any other bottled gas as a power source for this product.

17. **This Jack is intended for use on a shop crane (not included), properly attached. The shop crane to which the Long Ram Jack will be installed must be designed to use an 8 ton (16,000 pound) capacity Long Ram Jack.**

18. **The Long Ram Jack is designed for vertical, or near vertical, use only.** Do not use in a horizontal or upside down position.

19. **NEVER attempt to adjust the factory pre-set Safety Valve on the Long Ram Jack.**

20. **Not to be used for aircraft purposes.**

21. **WARNING!** The warnings and cautions discussed in this manual cannot cover all possible conditions and situations that may occur. It must be understood by the operator that common sense and caution are factors which cannot be built into this product, but must be supplied by the operator.

SAVE THESE INSTRUCTIONS

ASSEMBLY INSTRUCTIONS

1. **NOTE:** To attach the Long Ram Jack onto a shop crane you will need two **5/8" diameter Pins** of appropriate length and two **R-Pins** (neither included).

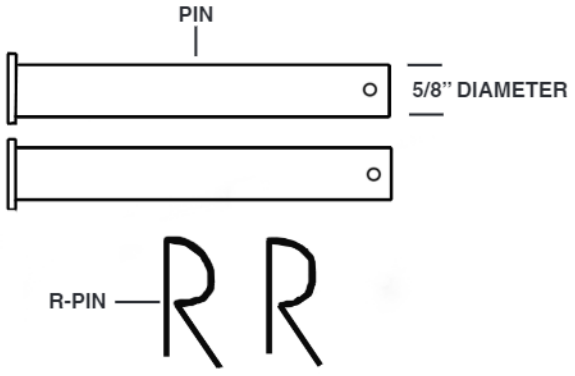

FIGURE A

⚠ WARNING! The Pins must be rated to support at least 8 tons (16,000 pounds) of pressure. (See Figure A.)

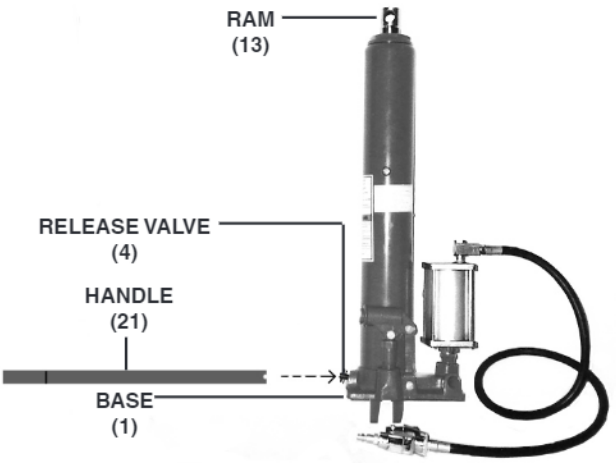

FIGURE B

2. Place the end of the Handle (21) over the Release Valve (4), and turn the Handle counterclockwise to fully lower the Ram (13). Then, remove the Handle. **(See Figure B.)**

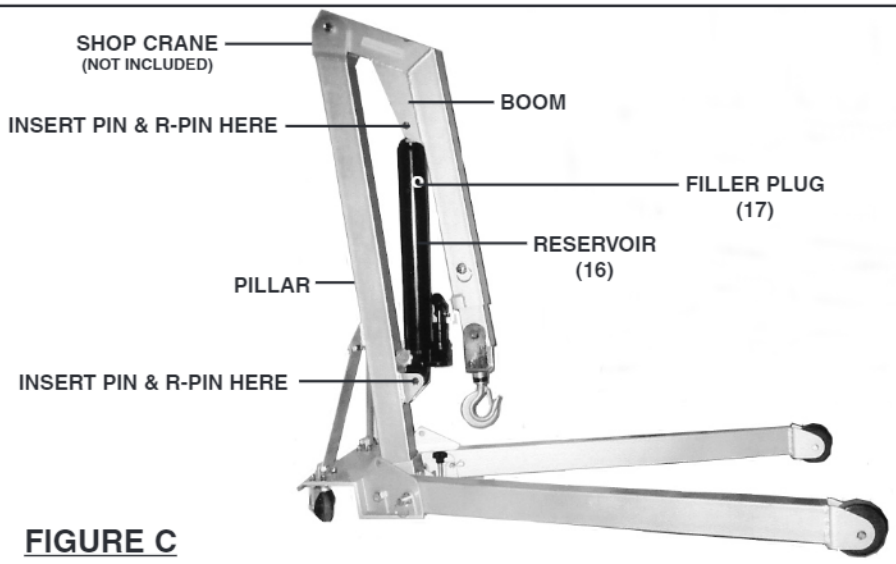

FIGURE C

3. Lower the Boom on the shop crane (not included). **(See Figure C.)**

4. With assistance, align the mounting hole in the Ram (13) with the mounting hole located in the Boom of the shop crane. Insert one Pin completely through both mounting holes. Then, secure the Pin in place with one R-Pin. **(See Figures B and C.)**

5. Align the two mounting holes in the Base (1) of the Long Ram Jack with the mounting hole located in the Pillar of the shop crane. Insert the remaining Pin completely through the mounting holes in the Base and the Pillar. Then, secure the Pin in place with the remaining R-Pin. **(See Figures B and C.)**

6. **IMPORTANT:** The Long Ram Jack already contains *some* hydraulic oil in its Reservoir (16). Even so, it is recommended that you check the oil level in the Reservoir

prior to the shop crane's first use and, if necessary, top off the Reservoir with the proper amount of hydraulic oil. To do so, remove the Filler Plug (17) located on the Reservoir. Top off the Reservoir with hydraulic oil. Make sure the Release Valve (4) is closed. Insert the Handle (21) in the Handle Bracket (31) and slowly pump the Handle until a slight amount of oil begins to leak out of the oil fill hole. Then, replace the Filler Plug. **Make sure to test the shop crane's performance several times before attempting to lift an object with the crane.**
Once satisfied that the crane is operating properly, then the crane is ready to lift an object. (See Figure C.)

OPERATING INSTRUCTIONS

MANUAL OPERATION

FIGURE D

To Operate Manually:

1. Position the shop crane so that its Hook is directly above the object you wish to lift. **(See Figure D, next page.)**

2. **WARNING! Stay clear of the shop crane.** Never go under an object being lifted by the crane. It is possible for its Hook to slip, causing an object to fall, possibly resulting in serious injury and/or property damage.

3. Use the Handle (21) of the Long Ram Jack to open the Release Valve (4) and lower the Hook. Attach the Hook to the object you are lifting. Then close the Release Valve, and pump the Handle to raise the object. Carefully move the engine crane to the location where you wish to lower the object, i.e., an engine stand, proper support, floor surface, etc. Then lower the object by opening the Release Valve slightly. Once the object is fully lowered, disconnect the Hook from the object. **(See Figures B and D.)**

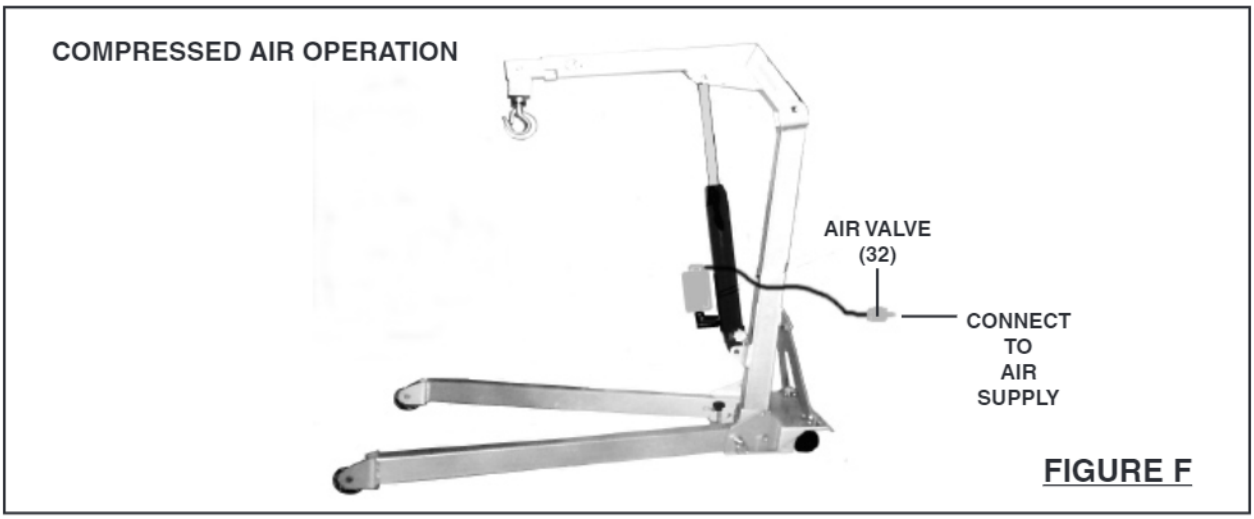

FIGURE F

To Operate, Using Compressed Air:

1. For best service, you should incorporate an oiler, regulator, and in-line filter, as shown in the diagram below. Hoses, couplers, oilers, regulators, and filters are all available at Harbor Freight Tools. **NOTE:** If an automatic oiler is not used, put 3-5 drops of pneumatic Tool Oil (not included) in the Long Ram Jack's Quick Coupler (A41) before each use. **(See Figure E.)**

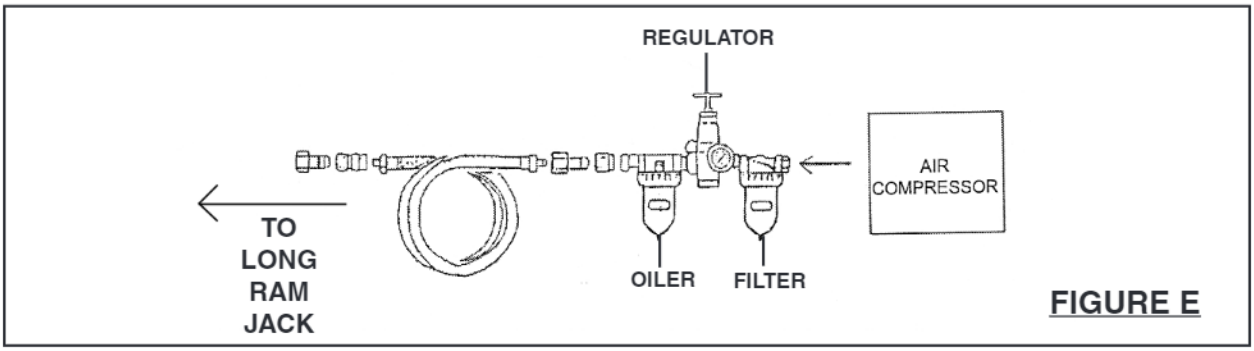

FIGURE E

2. Use the Handle (21) of the Long Ram Jack to open the Release Valve (4) and lower the Hook. Attach the Hook to the object you are lifting. Then close the Release Valve and remove the Handle. **(See Figures B, and F, next page.)**

3. Connect an air supply hose to the Quick Connector (A41) on the Air Valve (32) of the Long Ram Jack. **(See Figure F.)**

4. Turn on the air compressor, and set its regulator at 110 to 120 PSI. **Do not exceed 120 PSI.**

5. Squeeze the Lever of the Air Valve (32) to raise the object. Once raised, release pressure on the Lever. Carefully move the engine crane to the location where you wish to lower the object, making sure not to damage the air supply hose of the compressor. Then lower the object by opening the Release Valve slightly with the Handle (21) of the Long Ram Jack. Once the object is fully lowered, disconnect the Hook from the object. Turn off the air compressor. Then squeeze the Lever of the

Air Valve once again to release any remaining air pressure from the system. **(See Figures B and F.)**

6. When finished using the Long Ram Jack and shop crane, store the equipment in a clean, dry, safe location out of reach of children and other unauthorized people.

INSPECTION, MAINTENANCE, AND CLEANING

1. **Before each use,** inspect the general condition of the Long Ram Jack. Check for cracked, worn or damaged parts, loose or missing parts, low or no hydraulic oil, and any other condition that may affect the tool's safe operation. If a problem occurs, have the problem corrected before further use.
Do not use damaged equipment.

2. **To clean,** use a damp cloth and a mild detergent. Do not use solvents or other flammable agents.

3. **If lifting performance of the Long Ram Jack begins to diminish,** check the hydraulic oil level in the Reservoir (16). If necessary, top off the Reservoir with hydraulic oil. **(See Step #6, page 6-7.)**

4. **Drain and replace the hydraulic fluid at least once a year.** If you are uncertain how to do this, have the service performed by a qualified technician.

5. **To bleed the Long Ram Jack,** remove the Filler Plug (17) located on the Reservoir (16). Make sure the Release Valve (4) is closed. Insert the Handle (21) in the Handle Bracket (31) and slowly pump the Handle until a slight amount of oil begins to leak out of the oil fill hole. Top off the Reservoir with hydraulic oil. Then, replace the Filler Plug. **Make sure to test the Long Ram Jack's performance several times before attempting to lift an object with the shop crane.**
Once satisfied that the shop crane is operating properly, then the crane is ready to lift an object. (See Figure D.)

6. **When storing,** keep the Long Ram Jack and shop crane in a clean, dry, safe location out of reach of children and other unauthorized people.

7. **CAUTION!** All maintenance, service, and repairs not discussed in this manual should only be performed by a qualified service technician.

TROUBLESHOOTING

Problem	Possible Causes	Possible Solution
Jack will not lift load.	1. Release Valve not tightly closed. 2. Overload condition. 3. Air supply inadequate. 4. Air trapped in system.	1. Close Release Valve firmly. 2. Do not exceed 8 ton lifting capacity. 3. Ensure adequate air supply. 4. Purge air from system.
Jack will lift, but will not maintain pressure.	1. Release Valve not tightly closed. 2. Overload condition. 3. Hydraulic unit malfunction or defective seals.	1. Close Release Valve firmly. 2. Do not exceed 8 ton lifting capacity. 3. Have a qualified service technician check the hydraulic unit.
Jack will not lower after it is raised.	1. Reservoir overfilled. 2. Linkages binding.	1. Drain oil to proper level. 2. Clean and lubricate moving parts.
Poor lift performance.	1. Hydraulic oil level low. 2. Air trapped in system.	1. Add oil to proper level. 2. Purge air from system.
Will not lift to maximum height.	Hydraulic oil level low.	Add oil to proper level.

LIMITED 90 DAY WARRANTY

Harbor Freight Tools Co. makes every effort to assure that its products meet high quality and durability standards, and warrants to the original purchaser that this product is free from defects in materials and workmanship for the period of 90 days from the date of purchase. This warranty does not apply to damage due directly or indirectly, to misuse, abuse, negligence or accidents, repairs or alterations outside our facilities, criminal activity, improper installation, normal wear and tear, or to lack of maintenance. We shall in no event be liable for death, injuries to persons or property, or for incidental, contingent, special or consequential damages arising from the use of our product. Some states do not allow the exclusion or limitation of incidental or consequential damages, so the above limitation of exclusion may not apply to you. THIS WARRANTY IS EXPRESSLY IN LIEU OF ALL OTHER WARRANTIES, EXPRESS OR IMPLIED, INCLUDING THE WARRANTIES OF MERCHANTABILITY AND FITNESS.

To take advantage of this warranty, the product or part must be returned to us with transportation charges prepaid. Proof of purchase date and an explanation of the complaint must accompany the merchandise. If our inspection verifies the defect, we will either repair or replace the product at our election or we may elect to refund the purchase price if we cannot readily and quickly provide you with a replacement. We will return repaired products at our expense, but if we determine there is no defect, or that the defect resulted from causes not within the scope of our warranty, then you must bear the cost of returning the product.

This warranty gives you specific legal rights and you may also have other rights which vary from state to state.

3491 Mission Oaks Blvd. • PO Box 6009 • Camarillo, CA 93011 • (800) 444-3353

PLEASE READ THE FOLLOWING CAREFULLY

THE MANUFACTURER AND/OR DISTRIBUTOR HAS PROVIDED THE PARTS LIST AND ASSEMBLY DIAGRAM IN THIS MANUAL AS A REFERENCE TOOL ONLY. NEITHER THE MANUFACTURER OR DISTRIBUTOR MAKES ANY REPRESENTATION OR WARRANTY OF ANY KIND TO THE BUYER THAT HE OR SHE IS QUALIFIED TO REPLACE ANY PARTS OF THE PRODUCT. IN FACT, THE MANUFACTURER AND/OR DISTRIBUTOR EXPRESSLY STATES THAT ALL REPAIRS AND PARTS REPLACEMENTS SHOULD BE UNDERTAKEN BY CERTIFIED AND LICENSED TECHNICIANS, AND NOT BY THE BUYER. THE BUYER ASSUMES ALL RISKS AND LIABILITY ARISING OUT OF HIS OR HER REPAIRS TO THE ORIGINAL PRODUCT OR REPLACEMENT PARTS THERETO, OR ARISING OUT OF HIS OR HER INSTALLATION OF REPLACEMENT PARTS THERETO.

PARTS LIST & ASSEMBLY DIAGRAM

Part	Description	Qty.
1	Base	1
2	Ball	6
3	Seal	1
4	Release Valve	1
5	Ball Cup	2
6	Spring	1
7	Spring	1
8	Screw	2
9	Nylon Ring	1
10	Cylinder	1
11	O-Ring	1
12	Cup Seal	1
13	Ram	1
14	Ring	1

Part	Description	Qty.
15	Packing	1
16	Reservoir	1
17	Filler Plug	1
18	Nylon Ring	1
19	Top Nut	1
20	O-Ring	1
21	Handle	1
22	Copper Washer	2
23	Pump Cylinder	1
24	O-Ring	1
25	Nylon Ring	1
26	Back-Up Ring	1
27	Piston	1
28	Pin	3

Part	Description	Qty.
29	R-Pin	3
30	Connector	1
31	Handle Bracket	1
32	Air Valve	1
33	Air Hose	1
34	Air Motor	1
35	Ball	1
36	Ball Cup	1
37	Spring	1
38	Screw	1
39	O-Ring	1
40	Screw	1
41	Plastic Cap	1

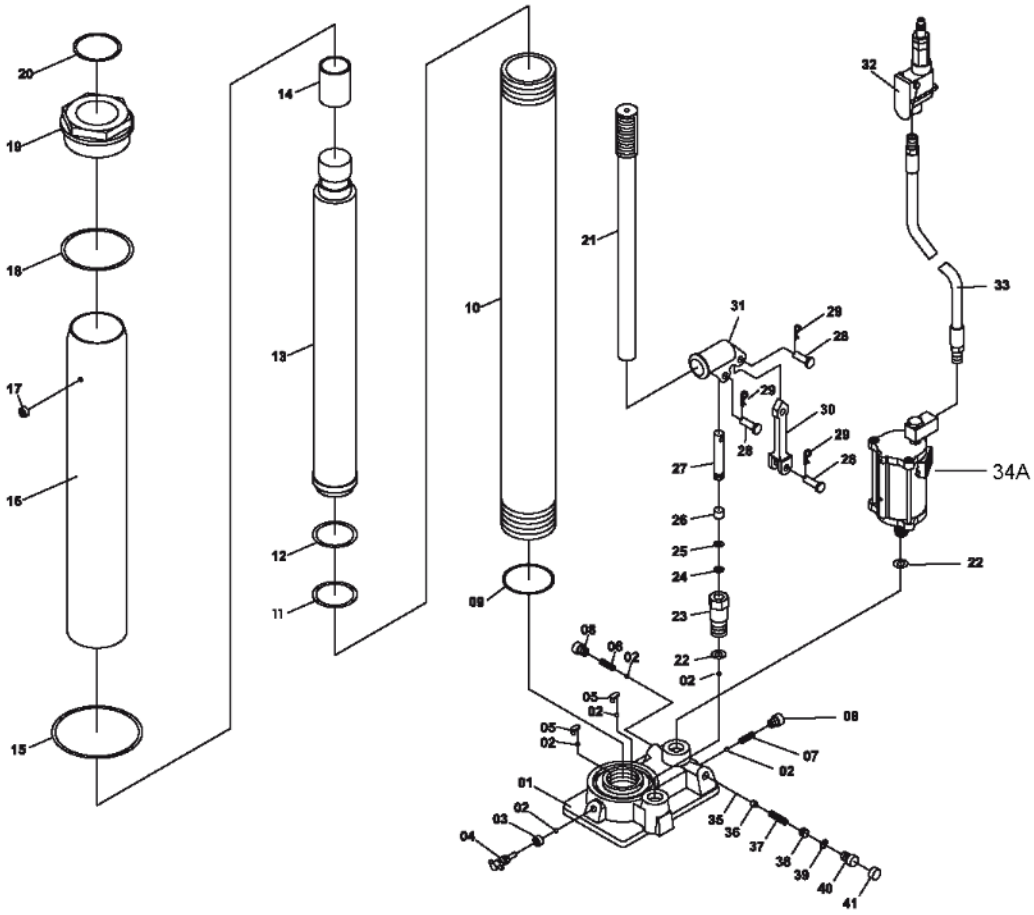

NOTE:
Some parts are listed and shown for illustration purposes only,
and are not available individually as replacement parts.

PARTS LIST & ASSEMBLY DIAGRAM A - AIR MOTOR

Part	Description	Qty.
A01	Air pump cylinder	1
A02	Nut	1
A03	Sealing Ring	1
A04	Nylon Ring	1
A05	Copper Ring	1
A06	Air Cylinder Seat	1
A07	Nut	1
A08	Spring	1
A09	Air Pump Piston	1
A10	O-Ring	2
A12	Large Piston	1
A13	O-Ring	1
A14	Small Piston	1
A15	O-Ring	1
A17	Sealing Ring	1
A18	Nylon Ring	1
A19	Air Cylinder	1

Part	Description	Qty.
A20	Air Cylinder Cap	1
A21	Bolt	3
A22	Coupler Seat	1
A23	Retaining Ring	1
A24	O-Ring	2
A25	Coupler	1
A26	Air Hose	1
A27	Lock Lever	1
A28	Lever	1
A29	Nut	1
A30	O-Ring	1
A31	O-Ring	1
A32	Packing	1
A33	Throttle	1
A34	Spring	1
A35	Lock Nut	1
A36	Bolt	1

Part	Description	Qty.
A37	Valve Body	1
A38	Screw	1
A39	Screen	1
A40	O-Ring	1
A41	Quick Coupler-male	1
A42	Bolt	3
A43	O-Ring	2
A44	O-Ring	1
A45	Coupler Seat	1
A46	Screw	2
A47	Lock Washer	2
A48	Safety Cover	1
A49	Filter	1
A50	Silencing pad	1

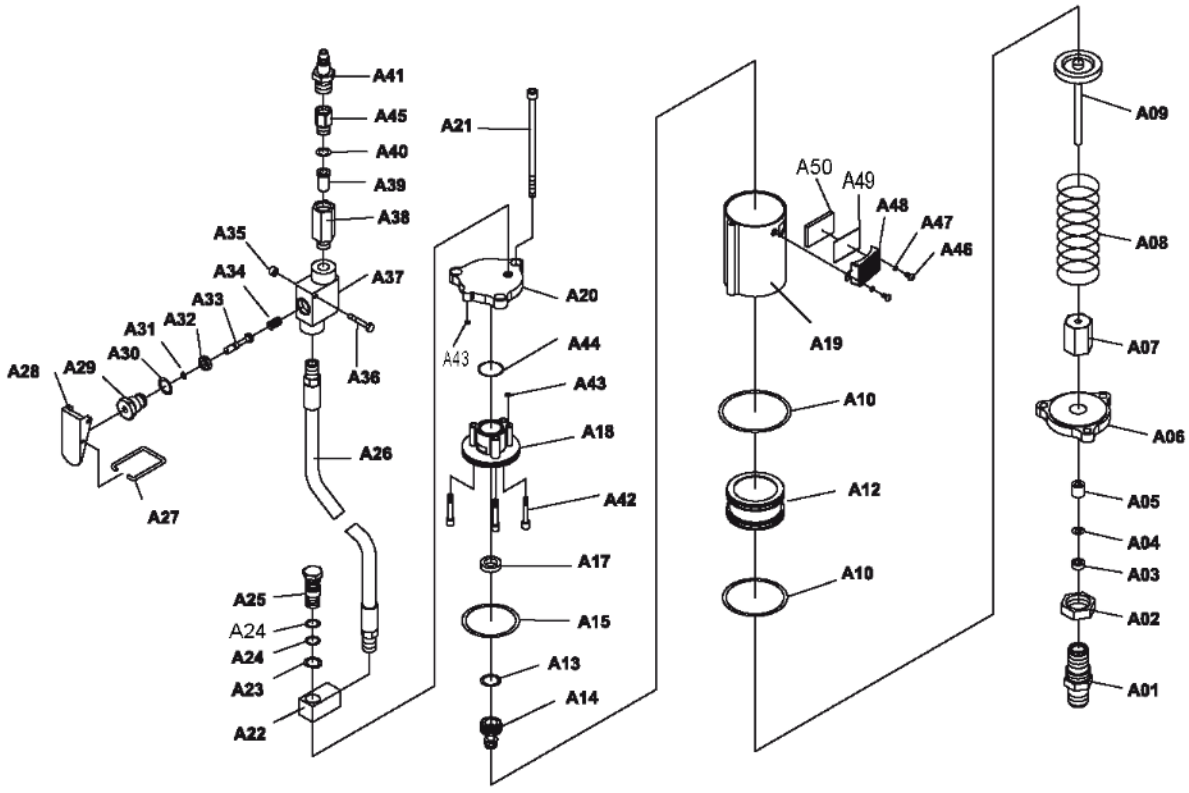

NOTE:
Some parts are listed and shown for illustration purposes only, and are not available individually as replacement parts.