MERTZ MANUFACTURING, LLC

BOXER

BIG POWER IN ALL PLACES

Boxer 526DX Parts Manual

Part No. 999-849.01
(SN 1133 and Higher)

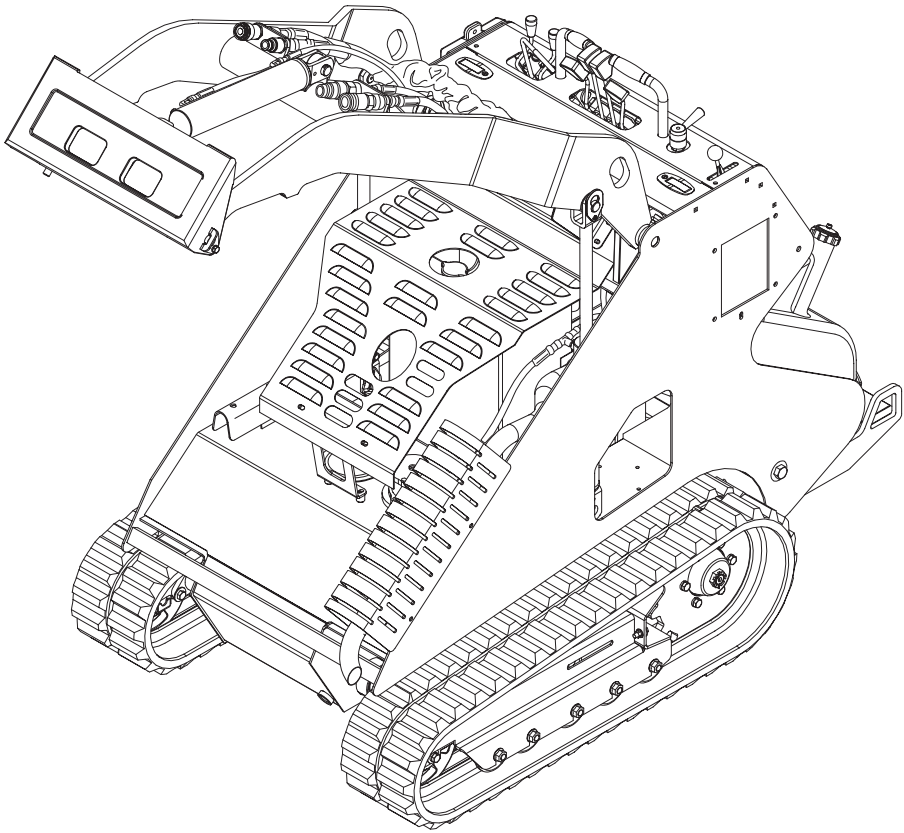

Table of Contents

Parts List and Illustrations	Page Number
Routine Maintenance Replacement Parts	iv
Creep Valve	2
Universal Mounting Plate and Loader Arm	4
Loader Arm Assembly	6
Decals Group	8
Hydraulic Cooler Group	10
Travel Drive Group	12
Idler Wheel and Spring Assembly	14
Mid-Wheel Assembly	15
6 Way Diverter Valve	16
Main Control Valve Group	18
Electrical Panel Assembly	20
Rear Frame Assembly	22
Hydraulic Filter and Engine Shroud Group	24
Muffler and Exhaust Group	26
Engine and Radiator Group	28
Diesel Fuel Supply and Filter Group	30
Battery Group	32

Write your machines Serial Number in the space below for future reference. The serial number is located on the metal tag on the left side of the machine.

NOTE: On some earlier models, the Serial Number tag was located inside the cowel assembly.

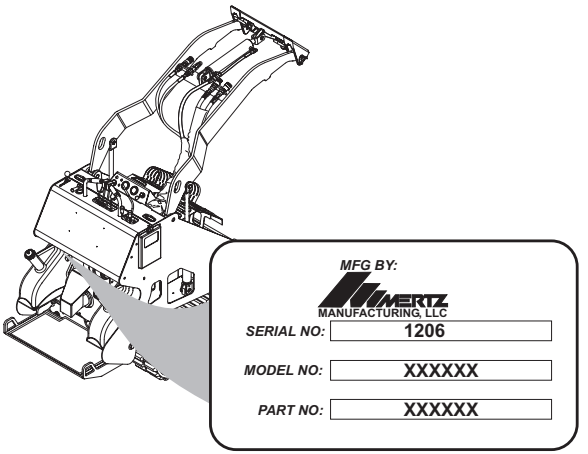

Record SERIAL Number here

Routine Maintenance Replacement Parts

The following parts should be considered as normal stock part items in your location. Keeping a supply of these will enable you to keep the Boxer in full service.

Part Name	Part Number
Air Filter Element	2393515.002
Fuel Filter (In-Line)	2393514.003
Hydraulic Oil Filter	2420619.001
Engine Oil Filter	2393514.001
Hydraulic Oil	Chevron Rykon Premium ISO 46 or equal
Seal Kit for Tilt Cylinder	3010046.004
Seal Kit for Wheel Motor	L112282.001
Replacement cartridge for Counterbalance valve	2405222.001
Replacement Ignition Key	2393514.008

Special Tools	Part Number
Pressure/Flow Gauge Set	70661
Test Port Pressure Gauge	999-990

This page intentionally left blank

Creep Valve

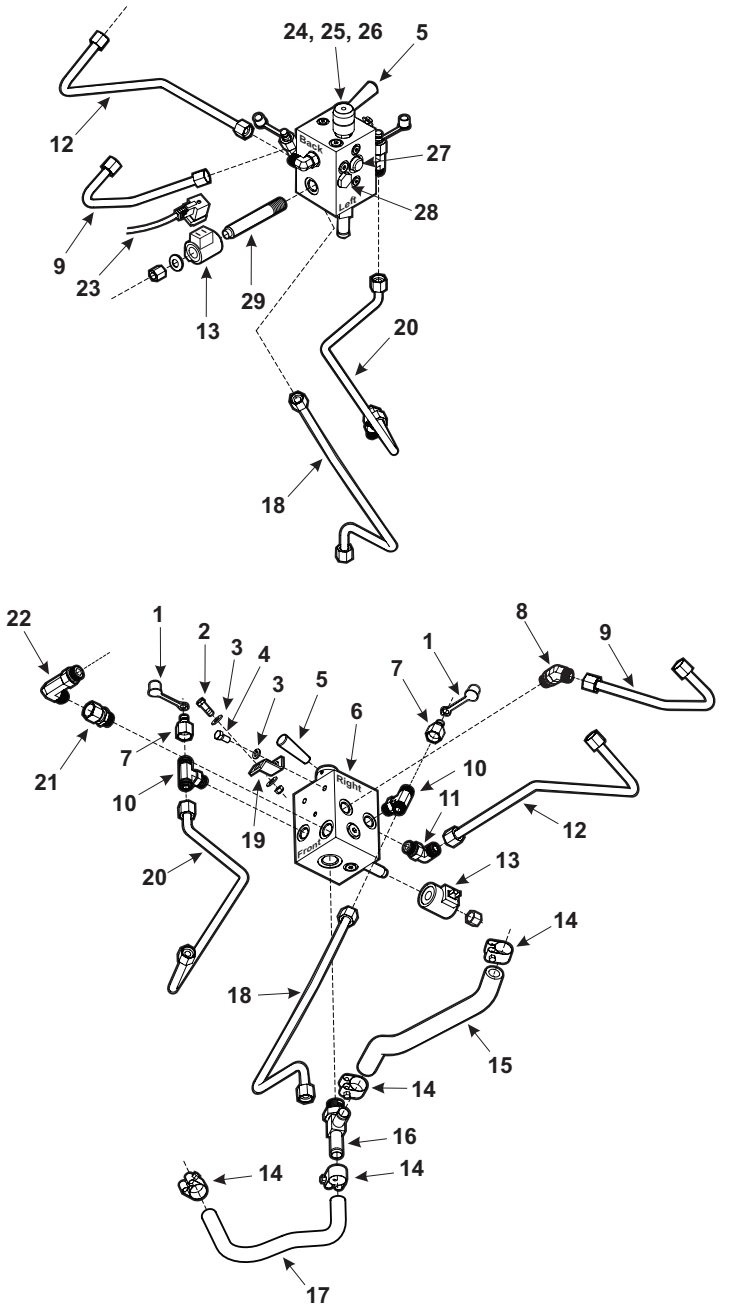

1131

Creep Valve

Item No.	Description	Quantity	Part Number
1	TEST PORT DUST CAP	2	2413363
2	BOLT	1	1913309C
3	FLAT WASHER	2	2303140
4	BOLT	1	1913303C
5	HANDLE END	1	2391381.005.01
6	HYDRAULIC MANIFOLD	1	2391381
7	TEST PORT FITTING	2	2420662
8	45 DEGREE FITTING	1	2416655
9	TUBE	1	3014193
10	TEE FITTING	2	2420659
11	90 DEGREE FITTING (12)	1	2419602
12	TUBE	1	3014192
13	SOLENOID VALVE COIL	1	2391381.007
14	CLAMP, SUPEREX 36-38	4	2413378
15	RETURN HOSE	1	2400873-017.00
16	FITTING	1	2420691
17	RETURN HOSE	1	2400873-014.50
18	TUBE	1	3014211
19	MOUNTING BRACKET	1	3015167
20	TUBE	1	3014212
21	FITTING (10)	1	2420641
22	90 DEGREE FITING (10)	1	2420639
23	ELECTRICAL HARNESS, SOLENOID VALVE	1	3012041
24	CREEP VALVE CONTROL HANDLE KIT	1	2391381.005
25	SCREW	1	2391381.005.02
26	CREEP CONTROL VALVE	1	2391381.003
27	FLOW CONTROL CARTRIDGE	1	2391381.004
28	CHECK VALVE	1	2391381.002
29	POPPET VALVE CARTRIDGE	1	2391381.006
30	O-RING, #10	2	2394885

Universal Mounting Plate and Loader Arm

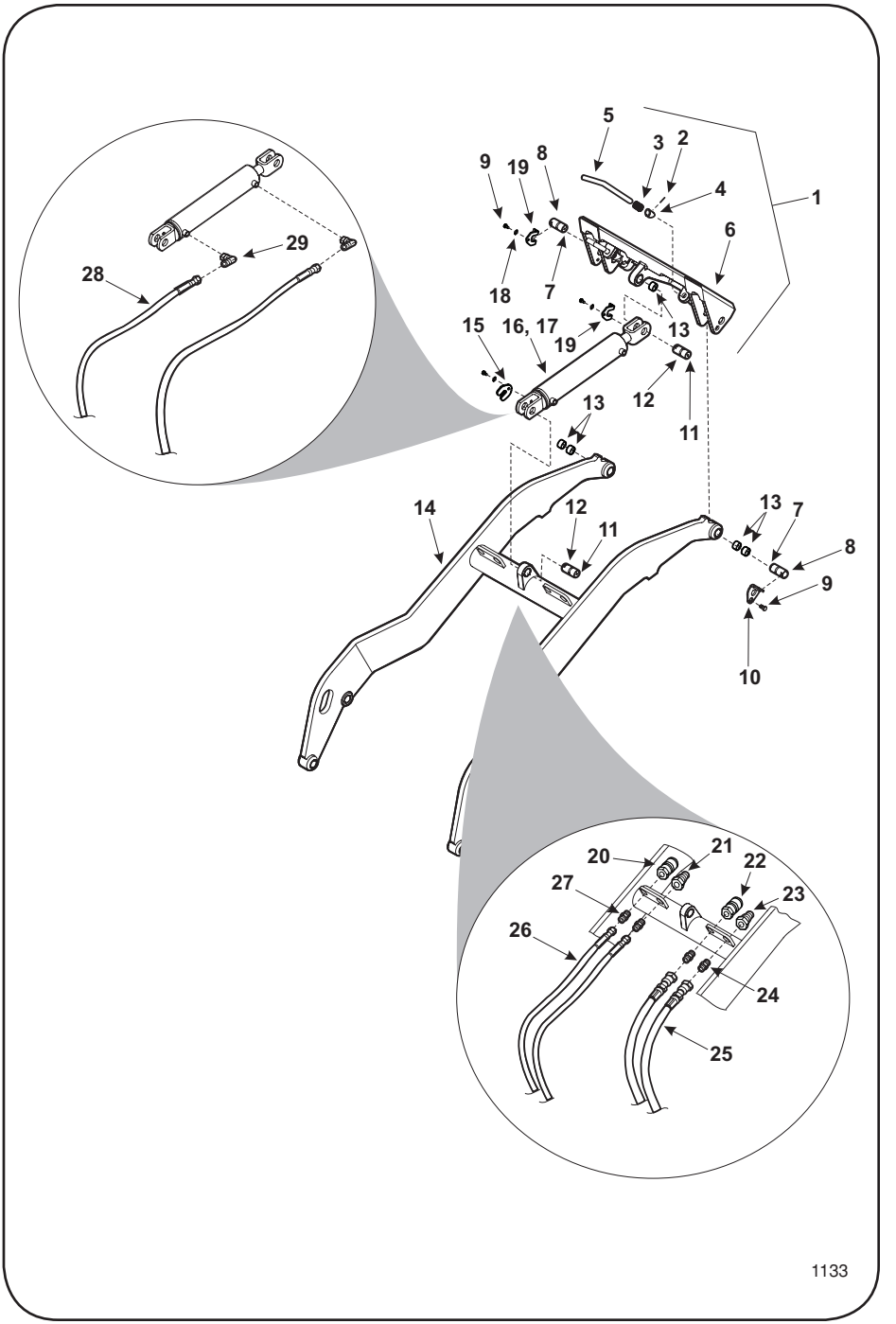

Universal Mounting Plate and Loader Arm

Item No.	Description		Quantity	Part Number
1	MALE COUPLER ASSEMBLY		1	3010916
	2	ROLL PIN	2	2401687
	3	SPRING, 15/16OD X .080	2	3010033
	4	MALE COUPLER ROUND LATCH STOP	2	3010378
	5	MALE COUPLER ROUND LATCH PIN	2	3010612
	6	MALE COUPLER CASTING	1	3010925
7	GREASE ZERK - 90 DEGREE		2	2651851-A
8	ROUND PIN 1" X 3 1/2" (3 1/8")		2	3010839
9	BOLT, HH 3/8-16 X 3/4		4	1913309C
10	PIN CLIP, RIGHT		1	3014221
11	GREASE ZERK - STRAIGHT		4	2651851
12	ROUND PIN 1" X 2 5/16"		2	3010896
13	CONNEX BUSHING		6	3010035
14	BOOM ARM WELDMENT (DIESEL)		1	3010890
15	PIN RETAINER		1	3010725
16	BUCKET TILT CYLINDER		1	3010046
	17	BUCKET TILT CYLINDER SEAL KIT	1	3010046.004
18	LOCK WASHER 3/8		4	2303412
19	PIN CLIP, LEFT		2	301422
20	FEMALE QUICK CONNECT		1	242686
21	MALE QUICK CONNECT		1	242687
22	FEMALE QUICK CONNECT		1	2420675
23	MALE QUICK CONNECT		1	2420676
24	BULKHEAD FITING, #10		2	2419679
25	HOSE		2	3600004-041.22
26	HOSE		2	3012061
27	BULKHEAD FITING, #8		2	2419674
28	HOSE		2	3600001-064
29	90 DEGREE FITTING		2	2416665

Loader Arm Assembly

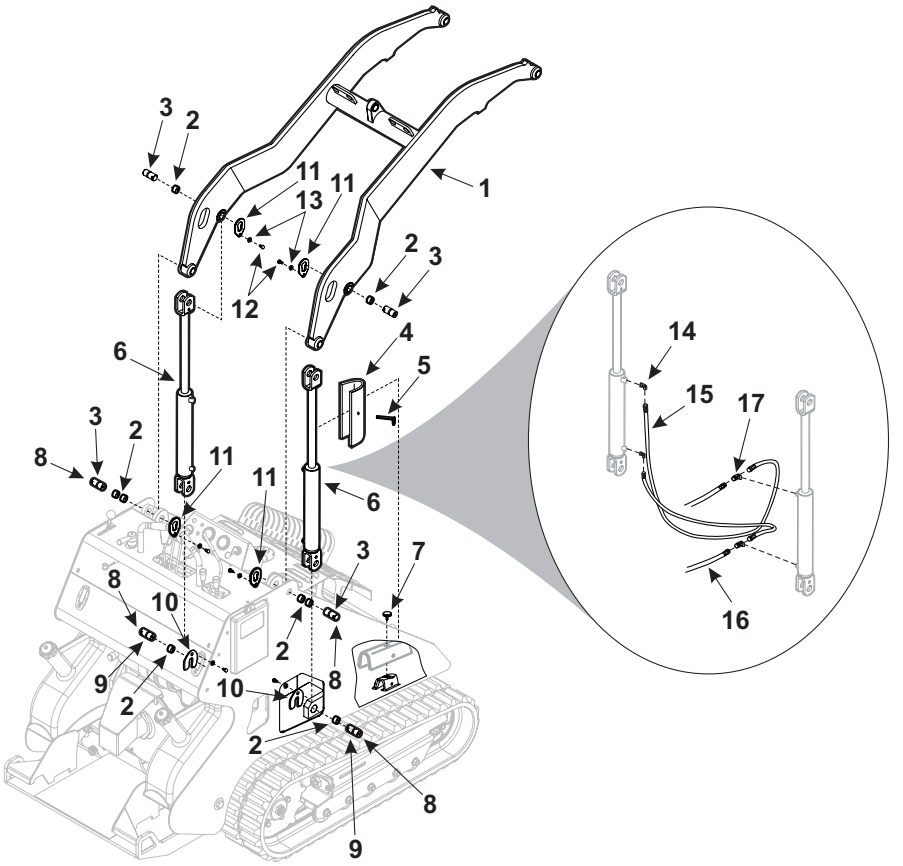

1135

Loader Arm Assembly

Item No.	Description	Quantity	Part Number
1	BOOM ARM WELDMENT	1	3010890
2	CONNEX BUSHING	8	3010035
3	ROUND PIN - 2 5/16”	4	3010896
4	BOOM CYLINDER SAFETY LOCK	1	3014127
5	SAFETYT LOCK RETAINER PIN AND RING	1	2397603
6	ARM LIFT CYLINDER	2	3010045
	REPAIR KIT	1	3010045.004
7	ROUND FLUTED KNOB	1	2394135
8	GREASE ZERK, STRAIGHT	6	2651851
9	ROUND PIN - 3 3/4	2	3010838
10	PIN RETAINER	2	3010725
11	PIN CLIP, CLOSED	4	3015284
12	BOLT	6	1913309C
13	LOCK WASHER	6	2303412
14	90 DEGREE FITTING	2	2416665
15	HOSE	2	3600001-036.00
16	HOSE	2	3600001-064.00
17	TEE FITTING	2	2420672

Decals Group

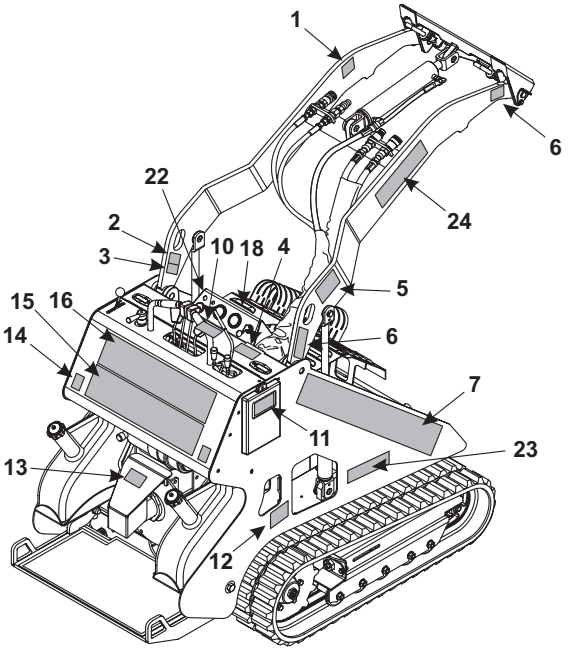

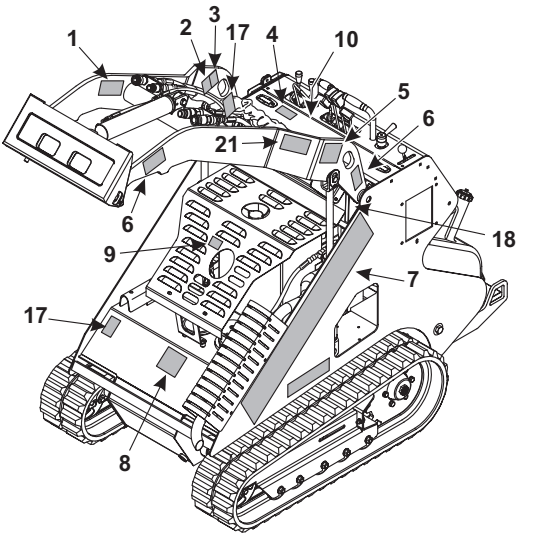

2154

Decals Group

Item No.	Description	Quantity	Part Number
1	DECAL, BURN HAZARD/SYM CONNECT CAU	2	3012103
2	DECAL, CABLE EYE	2	0K18608.008
3	DECAL, HOOK	2	0K18608.009
4	DECAL, AUX VALVE TO NEUTRAL DANGER	1	3012102
5	DECAL, STAY BACK/SYM DANGER	2	3012107
6	DECAL, CRUSH HAZARD/SYM DANGER	4	3012105
7	DECAL, BOXER -LARGE- W/RED	2	2400488
8	DECAL, MERTZ INSIGNIA	1	2396472
9	DECAL, HYD OIL RYKON PREMIUM ISO 46	1	2400467
10	DECAL, ATTACHMENT SECURE CAUTION	1	3012101
11	DECAL, READ MANUAL/SYM WARNING	1	3012106
12	DECAL, BATTERY GROUND (SYM)	1	3012112
13	DECAL, WARNING CA PROP 65	1	2400456
14	DECAL, DIESEL (SYMBOL)	2	3012113
15	DECAL, OPERATOR CONTROLS -SAFETY-	1	3014124
16	DECAL, OPERATOR CONTROLS	1	3014055
17	DECAL, INSTALL CYL LOCK/SYM WARNING	1	3012108
18	DECAL, MADE IN USA SQUARE	1	2396487
19	DECAL, SERIAL NUMBER BOXERS SMALL	1	2400463
20	NAMEPLATE, SERIAL NO. 2” X 3 1/2”	1	2297458
21	DECAL, BURN HAZARD/SYM CAUTION	1	3012104
22	CONTROL PANEL DECAL	1	3014240A
23	DECAL, BIG POWER	2	2400489
24	DECAL, 526DX	2	2400493

Hydraulic Cooler Group

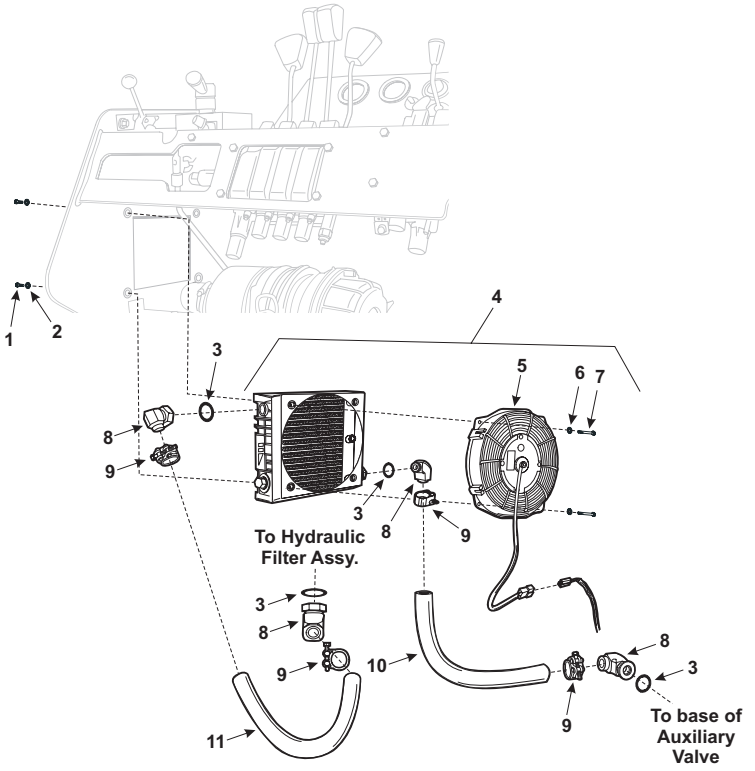

Item No.	Description		Quantity	Part Number
1	BOLT		4	2702041
2	LOCK WASHER		4	2702066
3	O-RING SEAL, #12		4	2394886
4	HYDRAULIC COOLER KIT		1	2410348
	5	12 V COOLER FAN	1	2410348.001
	6	FLAT WASHER, M6	4	2702025
	7	MOUNTING BOLT, M6	4	2702024
8	90 DEGEE ELBOW, #12		4	2419602
9	CLAMP, SUPEREX 29-31		4	2410373
10	RETURN HOSE		1	2400873-014.50
11	RETURN HOSE		1	2400873-017.00

This page intentionally left blank

Travel Drive Group

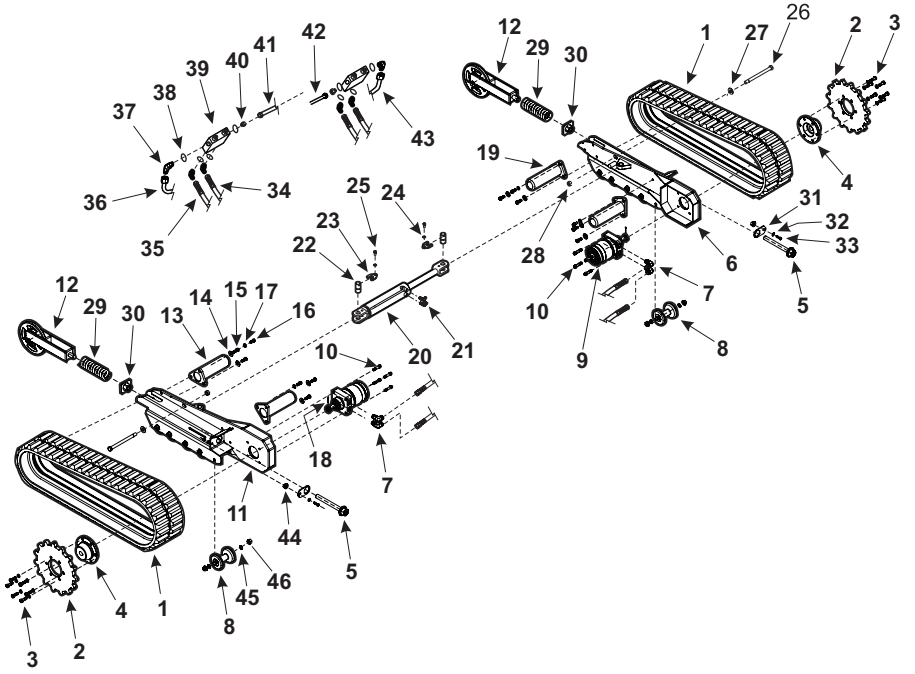

1141

Travel Drive Group

Item No.	Description	Quantity	Part Number
1	RUBBER TRACK	2	2412009
2	DRIVE SPROCKET	2	3014196
3	BOLT	12	1913337F
4	ROUND, HUB -DRIVE-	1	3014195
5	TENSIONING BOLT	2	3010785
6	RIGHT TRACK MODULE	1	3014060
7	FITTING	4	2416668
8	MID-WHEEL SPOOL ASSEMBLY	10	3010906
9	DRIVE MOTOR	2	2391383
10	BOLT	8	1912944C
11	LEFT TRACK MODULE	1	3014061
12	FRONT IDLER ASSEMBLY	2	3010904
13	LEFT GUIDE ROD	2	3014219
14	HARDENED WASHER	8	2292347
15	BOLT	8	1913606C
16	BOLT	4	1912937C
17	LOCK WASHER	16	2303415
18	COTTER PIN	1	1630444
19	RIGHT GUIDE ROD	2	3014218
20	TRACK WIDENING CYLINDER	1	2409400
21	FITTING	2	2416665
22	PIVOT PIN	2	3010896
23	PIVOT PIN FORK	2	3010725
24	LOCK WASHER	2	2303412
25	BOLT	2	1913309C
26	BOLT	2	1913516C
27	WASHER	2	0247111
28	NUT	2	1470014
29	TRACK TENSIONING SPRING	2	2417905
30	TENSIONING BOLT RETAINER	2	3010777
31	TENSIONING BOLT LOCK	2	3010778
32	BOLT, 3/8	2	1913327C
33	WASHER, 3/8	2	2303144
34	HOSE	2	3600004-037.22
35	HOSE	2	3600004-038.22
36	TUBE, CONTROL VALVE TO LEFT SIDE OF LEFT CBV	1	3014179
37	FITTING, 90 DEGREE, #10	6	2416668
38	O-RING, #10	8	2394885
39	COUNTERBALANCE VALVE	2	2405222
40	FITTING, #10	2	2416662
41	TUBE, CONTROL VALVE TO RIGHT SIDE OF LEFT CBV	1	3014180
42	TUBE, CONTROL VALVE TO LEFT SIDE OF RIGHT CBV	1	3014146
43	TUBE, CONTROL VALVE TO RIGHT SIDE OF RIGHT CBV	1	3014171

Idler Wheel and Spring Assembly

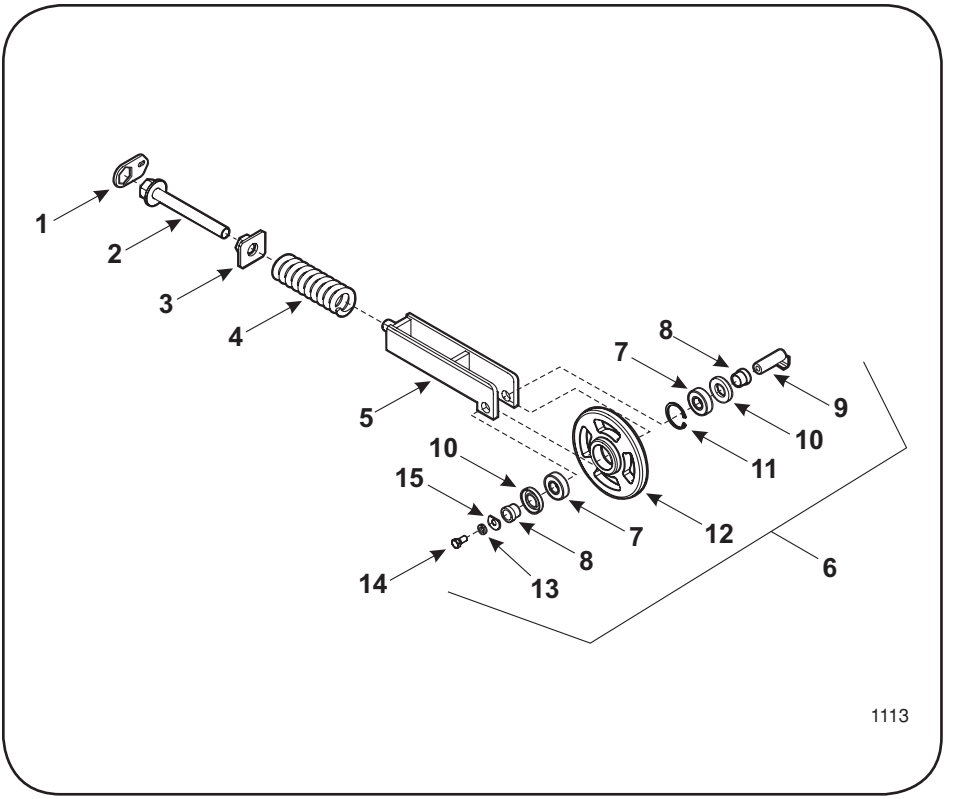

Item No.	Description		Quantity	Part Number
1	TENSION LOCK PLATE		1	3010778
2	JACKING BOLT WELDMENT		1	3016061
3	SPRING TENSIONER WELDMENT		1	3010777
4	SPRING		1	2417905
5	TRACK FORK WELDMENT		1	3010770
6	IDLER WHEEL ASSEMBLY		1	3010479
	7	BEARING	2	2410266
	8	IDLER SPACER TUBE	2	3010476
	9	IDLER PIN	1	3010474
	10	SEAL	2	2414963
	11	SNAP RING	1	2401861
	12	FRONT IDLER WHEEL	1	3010479
	13	LOCK WASHER	1	2303415
	14	BOLT	1	1913321C
	15	FLAT WASHER	1	3010519

Mid Wheel Assembly

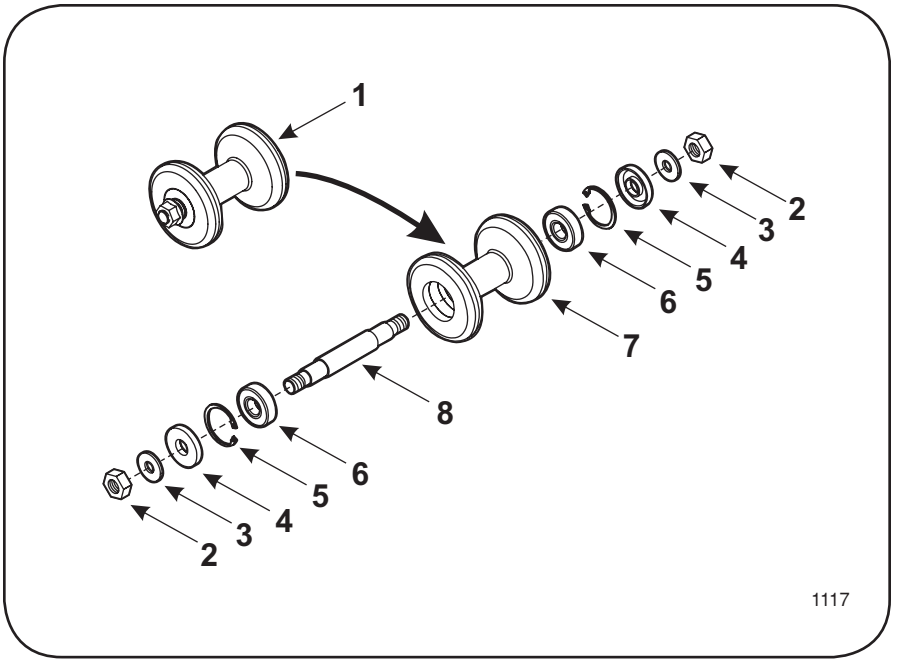

Item No.	Description		Quantity	Part Number
1	MID-WHEEL ASSEMBLY		1	3010906
	2	NUT	2	70.70492
	3	WASHER	1	2398376
	4	SEAL	2	2414982
	5	SNAP RING	1	2401860
	6	BEARING	1	2410265
	7	MIDWHEEL	1	3010763
	8	MIDWHEEL AXLE	1	3010781

6 Way Diverter Valve

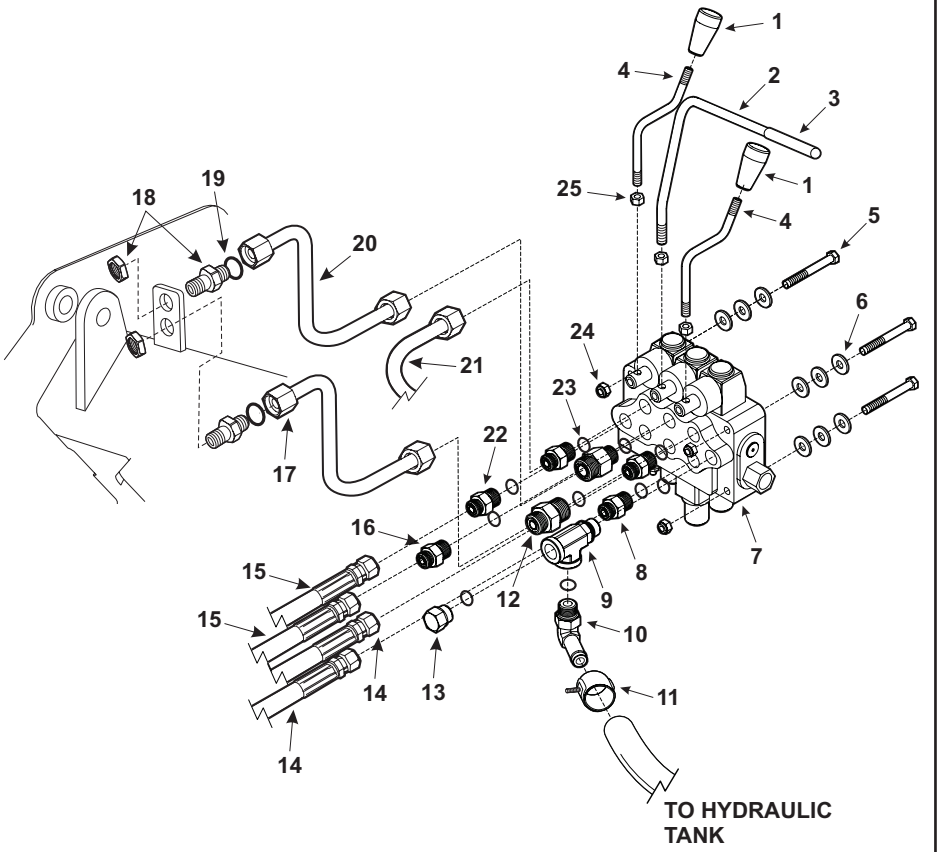

1130

6 Way Diverter Valve

Item No.	Description	Quantity	Part Number
1	KNOB	2	L117280-1.001
2	MAIN AUXILIARY LEVER	1	3014122
3	TEXTURED GRIP	1	2396752
4	AUXILIARY LEVER	2	3014121
5	BOLT,	3	1913384C
6	FLAT WASHER	9	2303143
7	WALVOIL 6-WAY VALVE	1	2405223
8	FITTING, #8	2	2416693
9	TEE FITTING, #8	1	2419631
10	FITTING, #8	1	2420651
11	CLAMP	1	2413378
12	FITTING, #8	2	2419630
13	PLUG, #8	1	2291621
14	HOSE, 2ND AUXILARY	2	3012061
15	HOSE, TRACK EXTENSION	2	3600001-064.00
16	FITTING, #8	1	2416661
17	TUBE, LOWER AUX BULKHEAD	1	3014132
18	BULKHEAD FITTING, #10	2	2419679
19	O-RING, #10	2	2394885
20	TUBE, UPPER AUX BULKHEAD	1	3014131
21	TUBE, MANIFOLD TO AUXILIARY	1	3014192
22	FITTING, #8	2	2420673
23	O-RING, #8	9	2291818
24	NYLOCK NUT	3	2297460
25	NUT	3	2702013

Main Control Valve Group

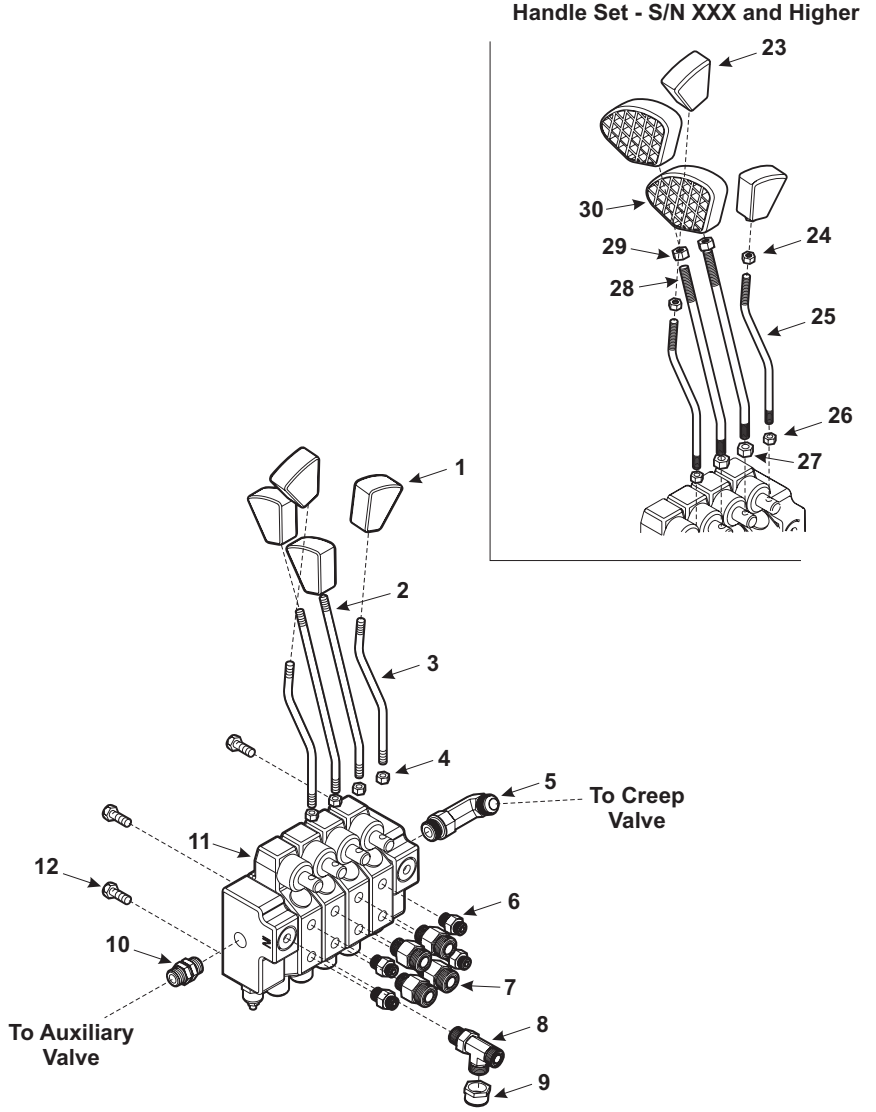

Main Control Valve Group

Item No.	Description	Quantity	Part Number
1	CONTROL KNOB	4	L117270
2	ROUND LEVER SHAFT, DRIVE CONTROLS	2	3015133
3	ROUND LEVER SHAFT, BOOM/BUCKET CONTROLS	2	3015134
4	LOCK NUT	4	2702013
5	O-RING, #10	1	2394885
6	FITTING	1	2420639
7	O-RING, #6	4	2394864
8	FITTING	4	2419618
9	HOSE	2	3600004-037.22
10	HOSE	2	3600004-038.22
11	FITTING	4	2419630
12	TUBE, CONTROL VALVE TO RIGHT SIDE OF LEFT CB	1	3014146
13	TUBE, CONTROL VALVE TO CREEP VALVE	1	3014193
14	TUBE, CONTROL VALVE TO LEFT SIDE OF RIGHT CB	1	3014179
15	TUBE, CONTROL VALVE TO RIGHT SIDE OF RIGHT CB	1	3014180
16	TUBE, CONTROL VALVE TO LEFT SIDE OF LEFT CB	1	3014171
17	CAP	1	2410342
18	TEE FITTING	1	2420674
19	O-RING, #6	4	2394864
20	STRAIGHT FITTING	1	2420636
21	BOLT	4	2393226
22	WALVOIL CONTROL VALVE BLOCK	1	2405226
23	CAST HANDLE	2	3014353
24	NUT - M8 X 1.25	4	2702013
25	ROUND LEVER SHAFT	2	3015134
26	NUT - M8 X 1.25	4	2702013
27	NUT - M10 X 1.5 ZC	2	2294469
28	ROUND LEVER SHAFT	2	3014353
29	NUT M10 X 1.5 ZC	2	2294469
30	TRAVEL CONTROL HANDLE, CAST	2	3014348

Electrical Panel Assembly

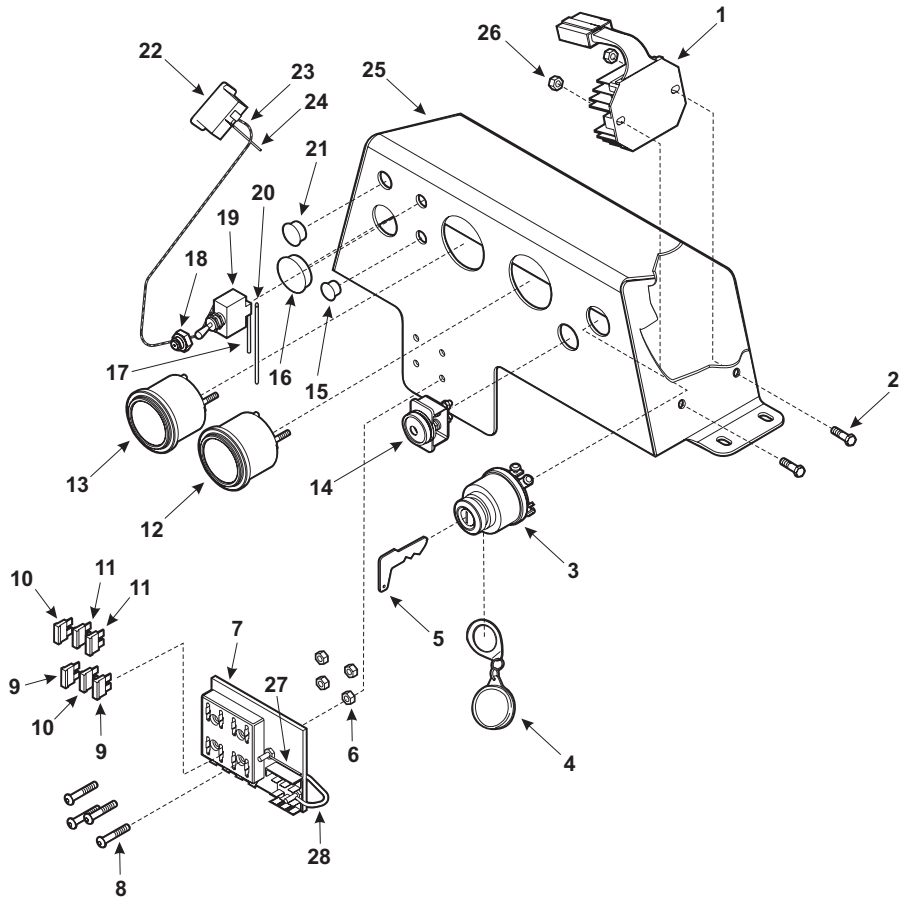

1129

Electrical Panel Assembly

Item No.	Description	Quantity	Part Number
1	REGULATOR, RECTIFIER	1	2393514.011
2	BOLT	4	1913317C
3	IGNITION SWITCH	1	2393514.01
4	IGNITIOIN SWITCH COVER	1	2393514.010.01
5	IGNITION KEY	1	2393514.008
6	NUT WITH NYLON INSERT	4	2297452
7	FUSE PANEL	1	2401699
8	MACH PAN HEAD MACHINE SCREW	1	1914098
9	BLADE TYPE FUSE ATO-1	2	2416616
10	BLADE TYPE FUSE ATO-3	2	2416617
11	BLADE TYPE FUSE ATC-15	2	2504420
12	OIL PRESSURE GAUGE	1	2296751
13	WATER TEMPERATURE GAUGE	1	2390769
14	GLOW PLUG	1	2393514.GP
15	PLUG	1	2394623
16	PLUG	1	2394632
17	HIGH RANGE GROUND HARNESS	1	3012042
18	TOGGLE SWITCH BOOT	1	2413242
19	TOGGLE SWITCH	1	2417946
20	HIGH RANGE WIRING HARNESS	1	3012041
21	PLUG	1	2417600
22	HOUR METER	1	2391384
23	HOUR METER TO TERMINAL STRIP HARNESS	1	3012008
24	HOUR METER TO GROUND HARNESS	1	3012009
25	GAUGE PANEL WELDMENT	1	3014174
26	NUT	1	2297461
27	MAIN WIRING HARNESS	1	3012059
28	FUSE PANEL GROUND HARNESS	1	3012030

Rear Frame Assembly

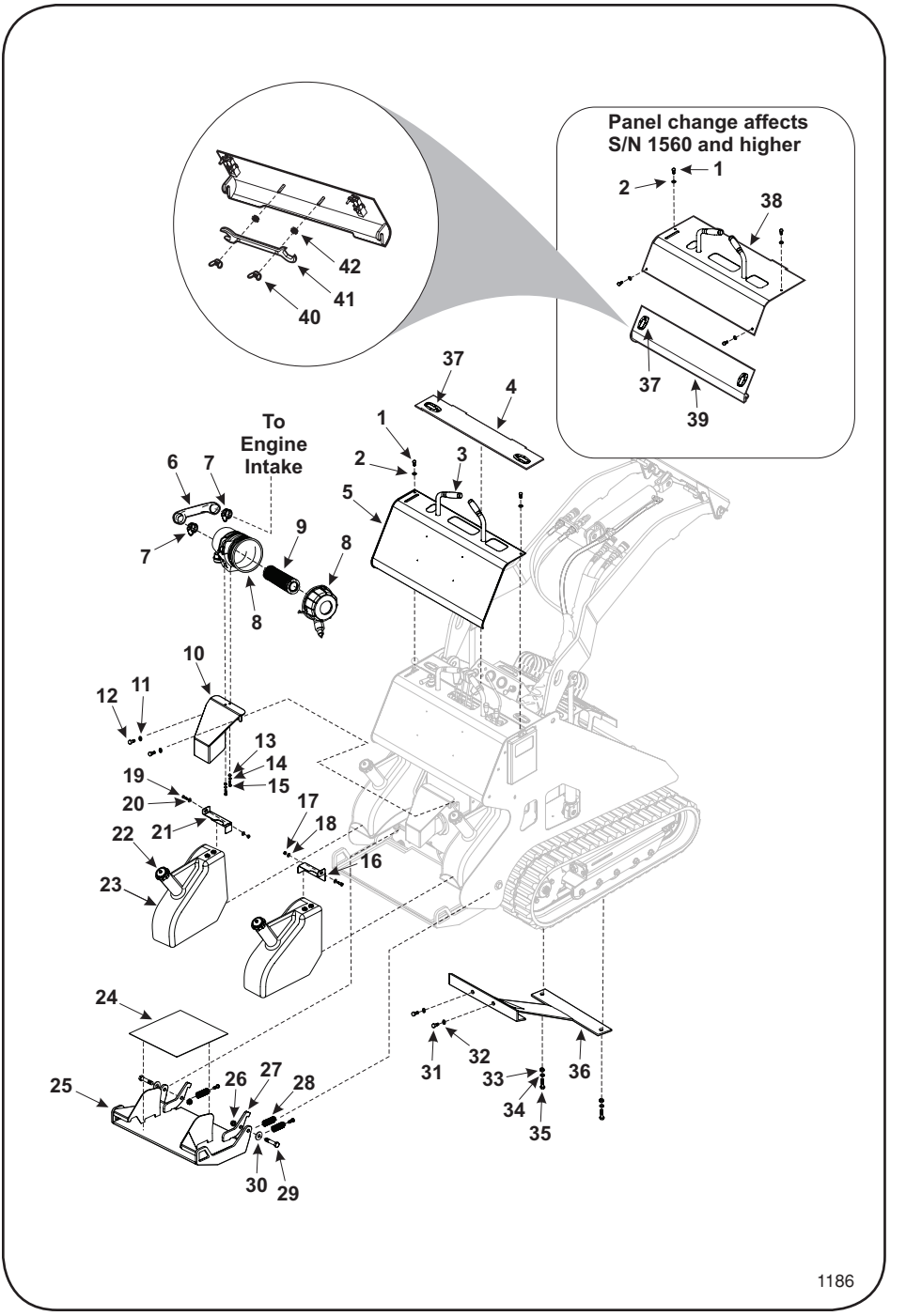

Rear Frame Assembly

Item No.	Description	Quantity	Part Number
1	BOLT	2	1913318C
2	FLAT WASHER	2	2303148
3	HAND GRIP	2	2396730
4	LOCKING ACCESS PANEL	1	3014137
5	CONTROL PANEL	1	3014135
6	AIR INTAKE HOSE	1	2393514.018
7	HOSE CLAMP	2	2393514.019
8	AIR CLEANER BODY ASSEMBLY	1	2393514.015
9	AIR FILTER ELEMENT	1	2393515.002
10	PUMP GUARD	1	3014176
11	LOCK WASHER	2	2303412
12	BOLT	2	1913327C
13	FLAT WASHER	2	2303140
14	FLAT WASHER	2	2303140
15	BOLT	2	2396235
16	FUEL TANK MOUNTING LOCK - RH	1	3014214
17	NUT	2	2297460
18	FLAT WASHER	2	2303140
19	BOLT	2	1913318C
20	FLAT WASHER	2	2303140
21	FUEL TANK MOUNTING LOCK - LH	1	30142185
22	FUEL TANK CAP/FUEL GAUGE	2	2405059.001
23	FUEL TANK	2	2405059
24	RUBBER MATT	1	2391392
25	OPERATOR PLATFORM	1	3014186
26	FLANGED NUT	2	70-70480
27	STOP PLATE	2	3014186
28	SPRING	3	2417921
29	BOLT	2	1913428C
30	FLAT WASHER	2	2303149
31	BOLT*	2	1913318C
32	FLAT WASHER*	2	2303148
33	FLAT WASHER*	2	2303148
34	LOCK WASHER*	2	2303415
35	BOLT*	2	1913606C
36	TRACK MOTOR GUARD*	1	3014063
37	LOCKING LATCH	2	2397211
38	CONTROL PANEL	1	3014243
39	LOCKING ACCESS PANEL	1	3014245
40	WING NUT	2	70.33162
41	WRENCH	1	3016380
42	RUBBER GROMMET	2	70.24657

*Early units were equipped with the Track Motor Guard. Later units have a non-replaceable guard that is part of the lower structure.

Hydraulic Filter and Engine Shroud Group

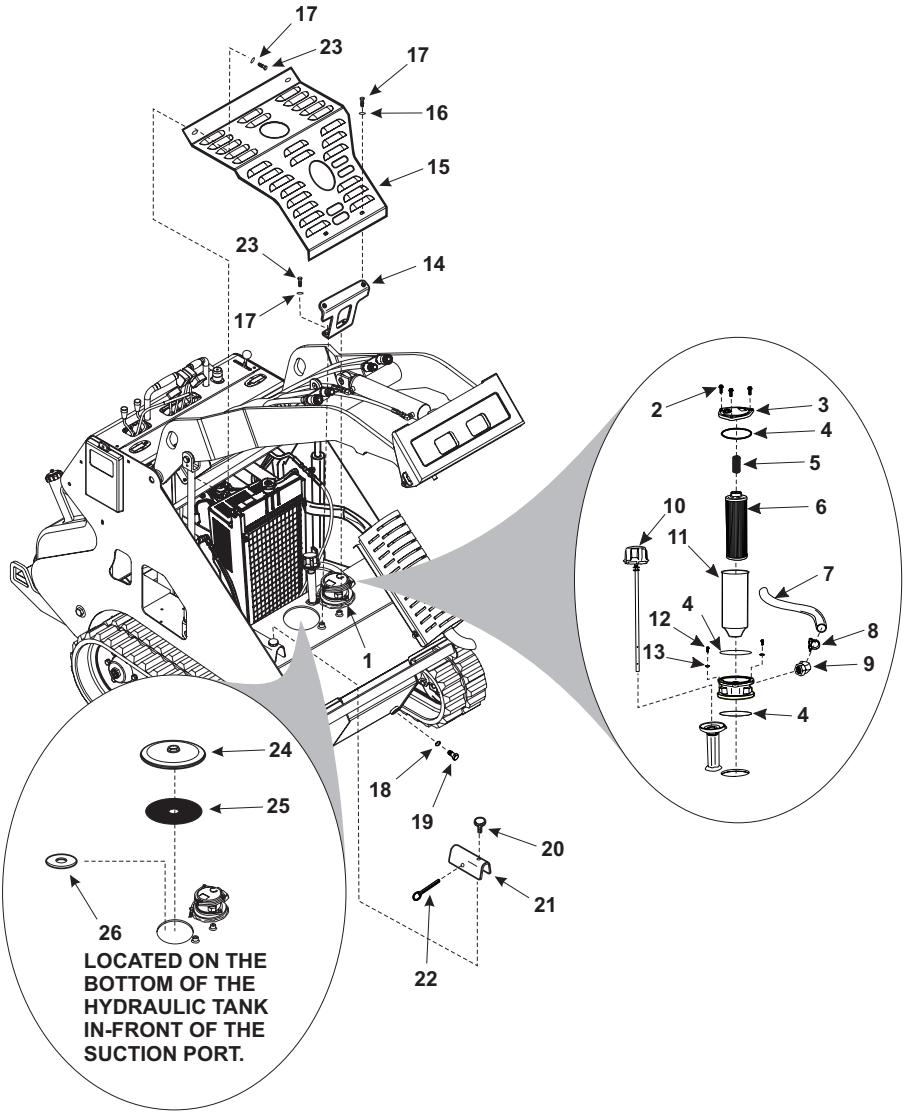

1185

Hydraulic Filter and Engine Shroud Group

Item No.	Description		Quantity	Part Number
1	HYDRAULIC FILTER ASSEMBLY		1	2420619
	2	HEX HEAD BOLT	3	2420619.007
	3	HYDRAULIC FILTER TOP COVER PLATE	1	2420619.005
	4	O-RING SEAL KIT	1	2420619.002
	5	HYDRAULIC FILTER PRESSURE SPRING	1	2420619.006
	6	HYDRAULIC FILTER ELEMENT	1	2420619.001
	7	HYDRAULIC HOSE	1	2400873.033.50
	8	CLAMP	2	2413353
	9	90 DEGREE MALE FITTING	1	2416668
	10	VENTED CAP WITH DIPSTICK	1	2410359
	11	FILTER HOLDER BASKET	1	2420619.003
	12	BOLT	2	1913318C
	13	LOCK WASHER	2	2303411
14	SHROUD SUPPORT		1	3014152
15	ENGINE SHROUD		1	3014151
16	BOLT		2	1913318C
17	FLAT WASHER		6	2303140
18	O-RING, #12		1	2394866
19	PLUG, #12		1	2291621
20	KNURLED KNOB		1	2394135
21	HYDRAULIC CYLINDER SAFETY SUPPORT		1	3014127
22	QUICK LOCK PIN		1	2397603
23	BOLT		4	1913308C
24	HYDRAULIC TANK CLEAN-OUT COVER		2	2413360
25	HYDRAULIC TANK CLEAN-OUT COVER GASKET		2	2413360.001
26	CERAMIC MAGNET		1	2397304

Muffler and Exhaust Group

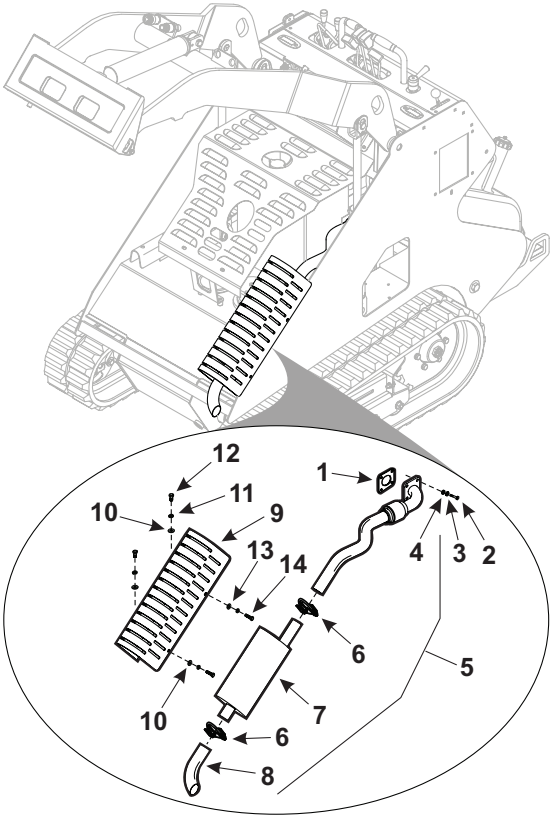

1132

Muffler and Exhaust Group

Item No.	Description		Quantity	Part Number
1	GASKET		1	2393514.02
2	FLAT WASHER		4	2702017
3	LOCK WASHER		4	2298393
4	BOLT		4	2396235
5	EXHAUST PIPE ASSEMBLY		1	3014024
	6	MUFFLER CLAMP	2	3015047
	7	MUFFLER	1	2391362
	8	EXHAUST TIP	1	3014024.001
9	MUFFLER GUARD		1	3014126
10	FLAT WASHER		2	2303143
11	LOCK WASHER		2	2303412
12	BOLT		2	1913309C
13	FLAT WASHER		2	2303140
14	BOLT		2	1913318C

Engine and Radiator Group

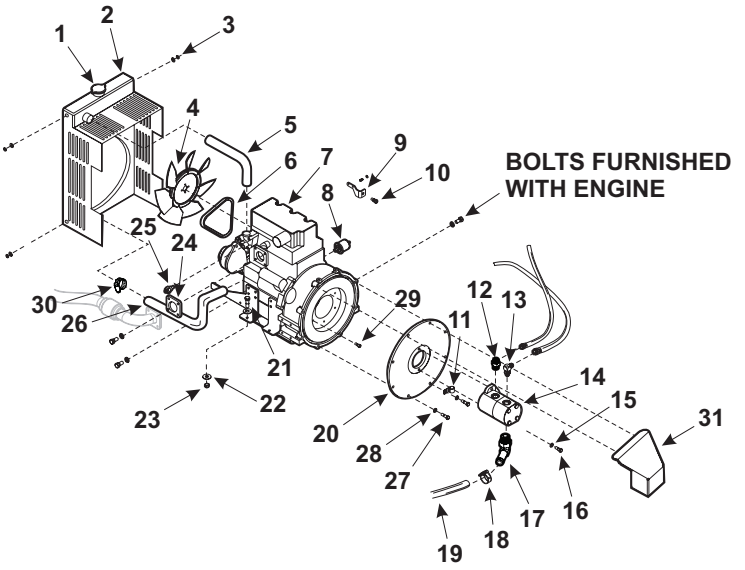

1138

Engine and Radiator Group

Item No.	Description	Quantity	Part Number
1	RADIATOR PRESSUR CAP	1	2393514.021
2	RADIATOR AND PROTECTIVE SHROUD	1	2393514.014
	2A RADIATOR	1	2393514.014.01
3	BOLT	4	2702012
4	BLOWER FAN	1	2393514.005
5	UPPER RADIATOR HOSE	1	2393514.023
6	FAN BELT	1	2393514.004
7	ENGINE, PERKINS 403C11 26.1 BHP	1	2393514
8	OIL PRESSURE SENDER	1	2411923
9	THROTTLE CABLE CLAMP	1	2393514.007
10	FITTING	1	2290525
11	CLAMP	1	2396304
12	STRAIGHT FITTING	1	2420638
13	90 DEGREE FITTING	1	2420692
14	2-SECTION 1-INLET HYDRAULIC PUMP	1	2414691
15	WASHER	2	2702045
16	BOLT	2	1913319C
17	90 DEGREE FITTING	1	2410610
18	CLAMP, SUPEREX 29-31	4	2410373
19	HOSE, CUT 22 1/2" LONG	1	2400874-022.5
20	HAYES FLYWHEEL COUPLING W/PMP	1	2413305
21	BOLT	6	1913337C
22	FLAT WASHER	6	2303146
23	NUT	6	1470110
24	EXHAUST GASKET	1	2393514.02
25	WATER TEMP SENDER	1	2417958
26	LOWER RADIATOR HOSE	1	2393514.024
27	BOLT, HH 3/8-16 X 1 1/4 NC ZC G5	8	1913327C
28	LOCK WASHER	10	2303412
29	BOLT	6	1912354C
30	HOSE CLAMP	4	2393514.019
31	PUMP GUARD	1	3014176

Diesel Fuel Supply and Filter Group

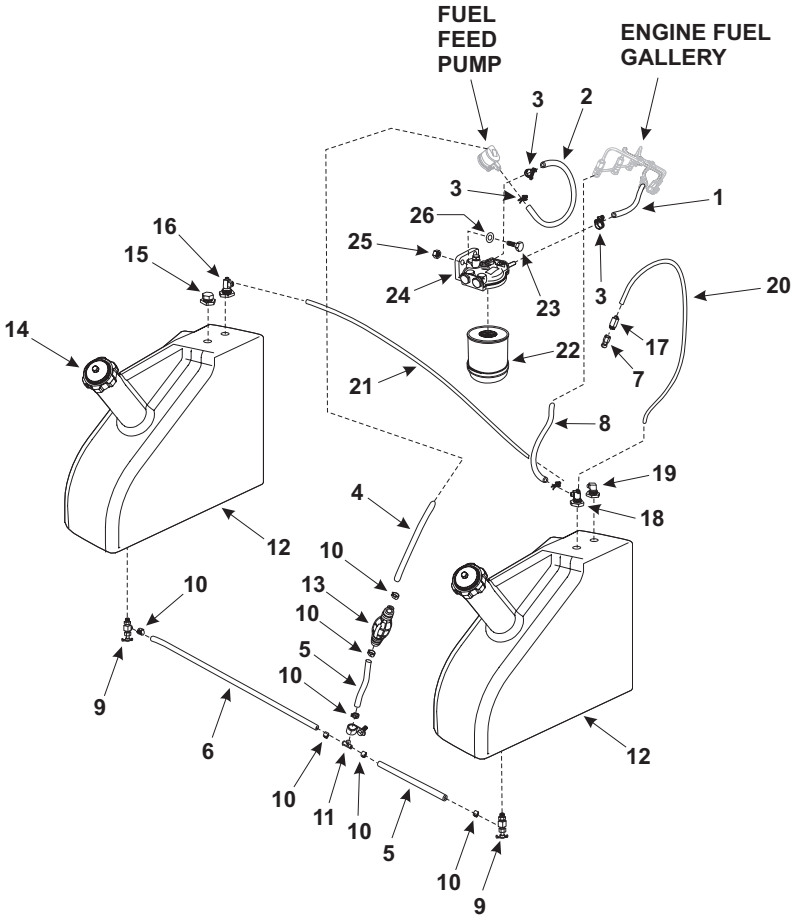

1137

Diesel Fuel Supply and Filter Group

Item No.	Description	Quantity	Part Number
1	FUEL HOSE, 3/16" J30R11	1	2400877
2	FUEL HOSE, 3/16" J30R11	1	2400877
3	FUEL HOSE CLAMP (pressure lines)	4	2409375
4	FUEL HOSE, 1/4" J30R11 x 11" LONG	1	2400876.011
5	FUEL HOSE, 1/4" J30R11 x 12" LONG	2	2400876.012
6	FUEL HOSE, 1/4" J30R11 x 17" LONG	1	2400876.017
7	BREATHER	1	2293227
8	FUEL HOSE, 3/16" J30R11 X 20" LONG	1	2400877.02
9	FUEL SHUTOFF VALVE 1/8NPT W/SCREEN	2	2402268
10	FUEL HOSE CLAMP	8	2409375
11	BARBED TEE HOSE FITTING	1	2413681
12	POLY FUEL TANK	2	2405059
13	FUEL PRIMER PUMP	1	2393514.012
14	FUEL TANK CAP/FUEL GAUGE	2	2405059.001
15	PLUG	1	1666251
16	ELBOW FITTING	1	2419637
17	FITTING	1	2419638
18	TEE FITTING	1	2419635
19	FITTING	1	2296593
20	1/4" FUEL BREATHER TUBE - 20"	1	2292089.02
21	1/4" FUEL BREATHER TUBE - 29"	1	2292089.029
22	FUEL FILTER	1	2393514.003
23	BOLT	2	1913326C
24	FUEL FILTER BODY	1	Supplied with engine
25	NUT	2	2297460
26	LOCK WASHER	2	2303411

Battery Group

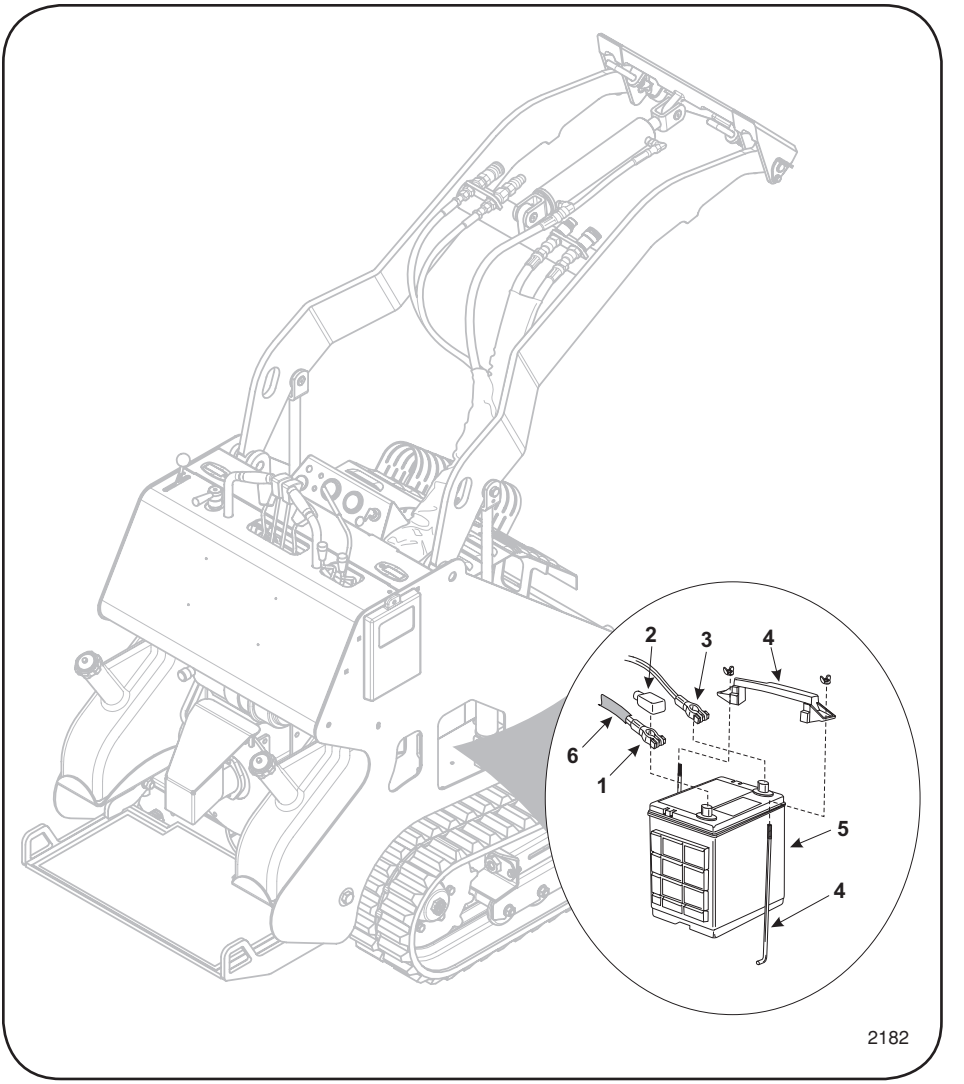

Item No.	Description	Quantity	Part Number
1	CABLE, BATTERY POSITIVE 4GA X 38”	1	3012060
2	INSULATOR, BATTERY TERM RED	1	2293900
3	CABLE, BATTERY NEGATIVE 4GA X 20”	1	3012034
4	BATTERY HOLDOWN, ADJSTBLE 10” BOLTS	1	2413219
5	BATTERY, 12V 585CCA 51-5YR	1	2504923
6	LOOM, CORRUGATED 30” LONG	1	70.84848-030.00

This page intentionally left blank

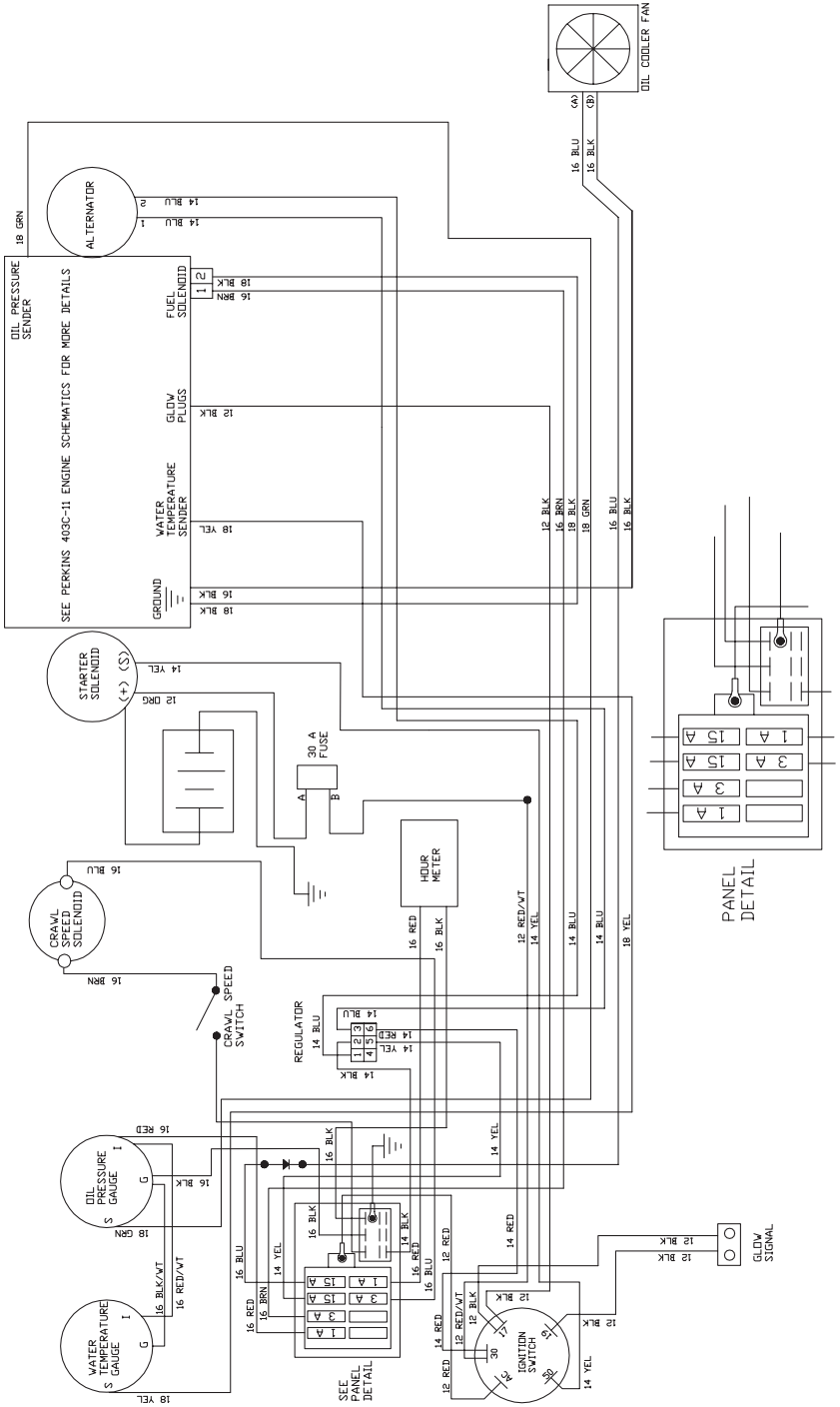
OIL COOLER FAN
(A)
(B)
16 BLU
16 BLK
ALTERNATOR
18 GRN
14 BLU
OIL PRESSURE SENDER
SEE PERKINS 403C-11 ENGINE SCHEMATICS FOR MORE DETAILS
FUEL SOLENOID
GLOW PLUGS
WATER TEMPERATURE SENDER
GROUND
18 BLK
16 BRN
12 BLK
18 YEL
16 BLK
12 BLK
16 BRN
18 BLK
18 GRN
16 BLU
16 BLK
STARTER SOLENOID
(+) (S)
14 YEL
12 ORG
30 A FUSE
A
B
HOUR METER
16 RED
16 BLK
12 RED/WT
14 YEL
14 BLU
14 BLU
18 YEL
PANEL DETAIL
15 A
1 A
15 A
3 A
3 A
1 A
CRAWL SPEED SOLENOID
16 BLU
16 BRN
CRAWL SPEED SWITCH
REGULATOR
14 BLU
14 RED
14 YEL
14 BLK
OIL PRESSURE GAUGE
16 RED
16 BLK
18 GRN
16 BLK/WT
16 RED/WT
WATER TEMPERATURE GAUGE
18 YEL
16 BLU
14 YEL
16 BLK
14 BLK
16 RED
16 BLU
12 RED
14 RED
16 BRN
16 RED
SEE PANEL DETAIL
12 BLK
12 BLK
GLOW SIGNAL
12 BLK
12 RED/WT
14 RED
12 RED
IGNITION SWITCH
AC
30
17
19
50
14 YEL

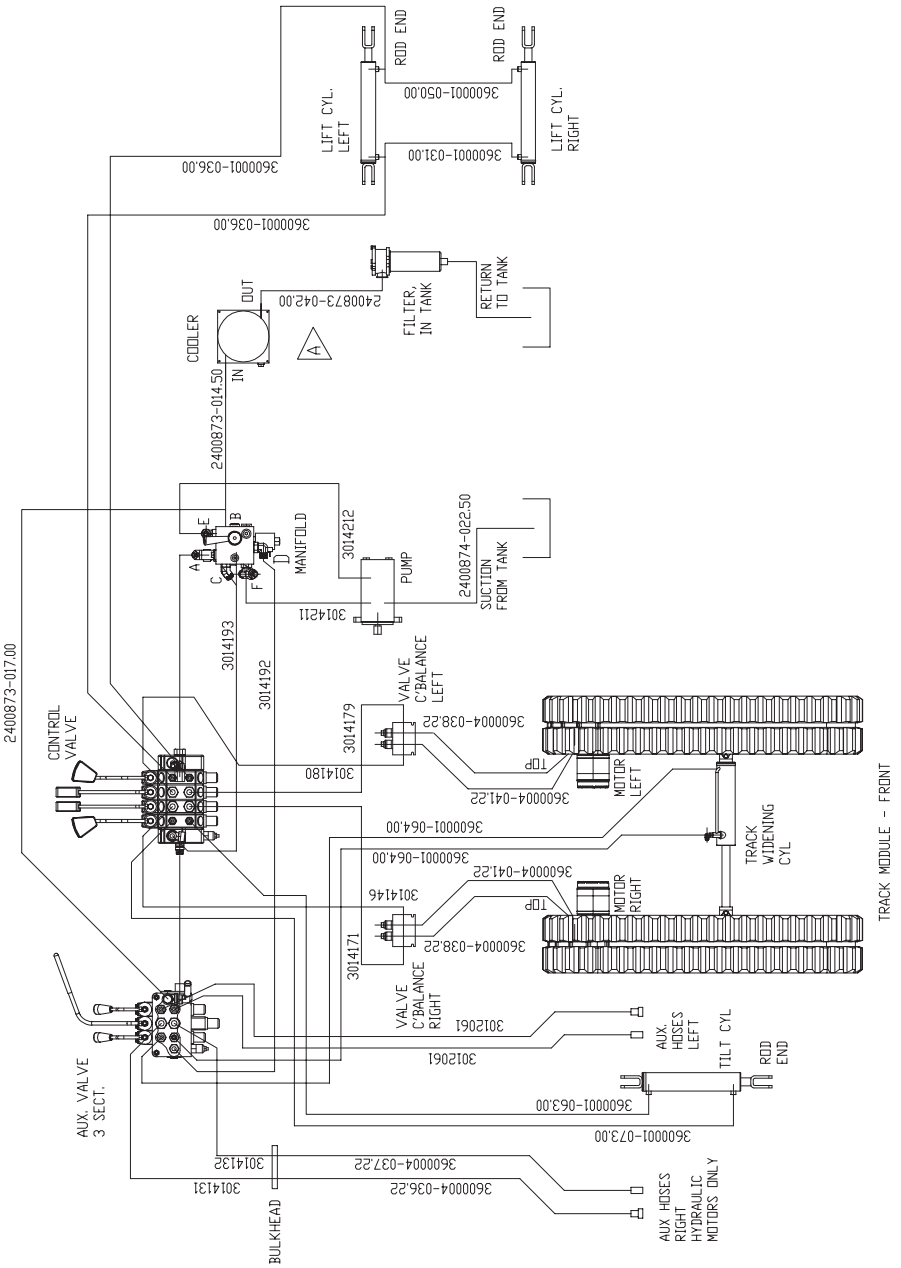
2400873-017.00
CONTROL VALVE
AUX. VALVE 3 SECT.
BULKHEAD
3014131
3014132
3600004-036.22
3600004-037.22
AUX HOSES RIGHT HYDRAULIC MOTORS ONLY
3600001-073.00
3600001-063.00
TILT CYL ROD END
AUX. HOSES LEFT
3012061
3012061
VALVE C'BALANCE RIGHT
3014171
3014146
3600004-038.22
TOP
MOTOR RIGHT
3600004-041.22
3600001-064.00
3600001-064.00
TRACK WIDENING CYL
TRACK MODULE - FRONT
3600004-041.22
TOP
MOTOR LEFT
3600004-038.22
3014179
VALVE C'BALANCE LEFT
3014180
3014193
3014192
3014211
PUMP
3014212
MANIFOLD
2400874-022.50
SUCTION FROM TANK
2400873-014.50
IN
DUT
COOLER
2400873-042.00
FILTER, IN TANK
RETURN TO TANK
3600001-036.00
3600001-036.00
LIFT CYL. LEFT
3600001-050.00
ROD END
3600001-031.00
ROD END
LIFT CYL. RIGHT

Mertz Manufacturing
1701 N Waverly St.
Ponca City, OK 74601

Phone: 800-654-6433 Fax: (580) 767-8411
Web Site: www.mertzok.com

Part No. 999-849.01 (SN 1133 and Higher)