Porto-Power®
BLACKHAWK AUTOMOTIVE™
Porto-Power Blackhawk Automotive is a licensed trademark

Rams

Operating Instructions & Parts Manual

Model Number	Capacity
B65141	2 Ton
B65142, B65150	4 Ton
B65553, B65555	5 Ton
B65441, B65442, B65444, B65446, B65449, B65452	10 Ton
B65740	20 Ton
B65746	25 Ton

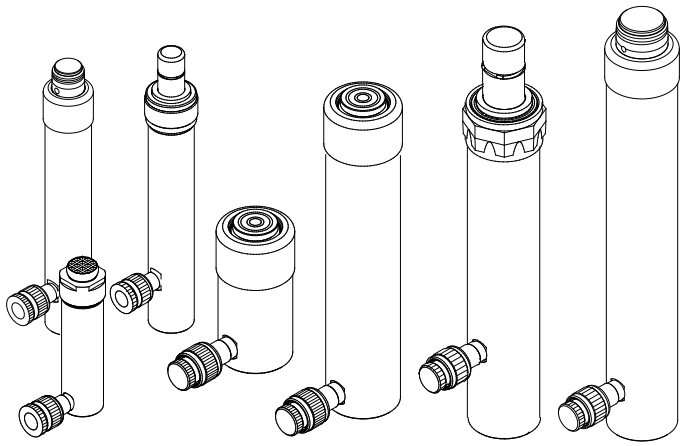

This is the safety alert symbol. It is used to alert you to potential personal injury hazards. Obey all safety messages that follow this symbol to avoid possible injury or death.

⚠ ADVERTENCIA

- Leer, comprender, y seguir las instrucciónes antes de utilizar el aparato.
- El manual de instrucciónes y la información de seguridad deben estar comunicado en lengua del operador antes del uso.
- No seguir estas indicaciónes puede causar daños personales o materiales.

SFA Companies
10939 N. Pomona Ave. Kansas City, MO 64153
sales@blackhawk-automotive.com

Read this manual and follow all the Safety Rules and Operating Instructions before using this product.

Printed in Taiwan
B65141-M0 rev 12/07

SAFETY and GENERAL INFORMATION

Save these instructions. For your safety, read and understand the information contained within. The owner and operator shall have an understanding of this product and safe operating procedures before attempting to use this product. Instructions and Safety information shall be conveyed in the operators native language before use of this product is authorized. Make certain that the operator thoroughly understands the inherent dangers associated with the use and misuse of the product. If any doubt exists as to the safe and proper use of this product as outlined in this factory authorized manual, remove from service.

Inspect before each use. Do not use if broken, bent, cracked or otherwise damaged parts are noted. If any component of this product has been or suspected to have been subjected to a shock load (a load dropped suddenly, unexpectedly upon it), discontinue use until checked out by an Porto-Power Blackhawk Automotive authorized service center. Owners and operators of this equipment shall be aware that the use and subsequent repair of this equipment may require special training and knowledge. It is recommended that an annual inspection be done by qualified personnel and that any missing or damaged parts, decals, warning/safety labels or signs be replaced with factory authorized replacement parts only. Any component of this ram that appears to be damaged in any way, is worn or operates abnormally shall be removed from service immediately until such time as it can be repaired/replaced. Labels and Operator's Manuals are available from manufacturer.

PRODUCT DESCRIPTION

Porto-Power Rams are designed for rated capacity pushing, spreading and pressing jobs. A wide variety of applications exist for this category of product. Special skill, knowledge and training may be required for a specific task and the product may not be suitable for all the jobs described above. Unsuitable applications would include applications that call for a device to move, level or support persons, animals, hazardous materials, mobile homes/dwellings in general, mirrors and/or plate glass, and/or to connect/secure hatches, components, etc. between bulkheads. The user ultimately must make the decision regarding suitability of the product for any given task and therefore accept responsibility for that decision. I**mmediately** after lifting, loads must be supported by appropriate mechanical means.

***NEVER** use hydraulic ram as a support device!*

WARNING: *To reduce the risk of personal injury and/or property damage, ensure that the rated working pressure of each pressurized attachment be equal to or greater than the rated working pressure developed by the hydraulic pump.*

Always check connections before using. Alteration of these products is strictly prohibited. Use only those adapters and attachments provided and approved by the manufacturer.

SPECIFICATIONS

Model Number	Ram Capacity (ton)	Stroke (in)	Ram Effective Area (in^2)	Oil Capacity (in^3)	Collapsed Height (in)	Extended Height (in)	Plunger Dia. (in)	Housing Dia. (in)	Pressure at Rated Cap. (psi)	Port
B65141	2	3.07	0.76	2.28	5.39	8.46	0.87	1.31	5,270	1/4"NPTF
B65142	4	5.07	1.00	5.00	10.31	15.39	1.00	1.50	8,000	
B65150		5.00		5.00	10.69	15.69	0.88			
B65553	5	3.07	1.00	3.00	6.65	9.72	1.00	1.50	10,000	
B65555		5.08		5.00	8.70	13.78				
B65441	10	2.01	2.24	4.48	4.84	6.85	1.50	2.26	8,930	3/8"NPTF
B65442		6.10		13.44	11.61	17.72				
B65444		10.12		22.40	15.63	25.75				
B65446		6.10		13.67	9.76	15.86				
B65449		10.12		22.66	13.78	23.90				
B65452		6.03		13.44	14.59	20.62				
B65740	20	5.16	5.14	25.70	11.77	16.93	2.24	3.35	7,780	
B65746	25	5.94		30.84	10.71	16.81			9,730	

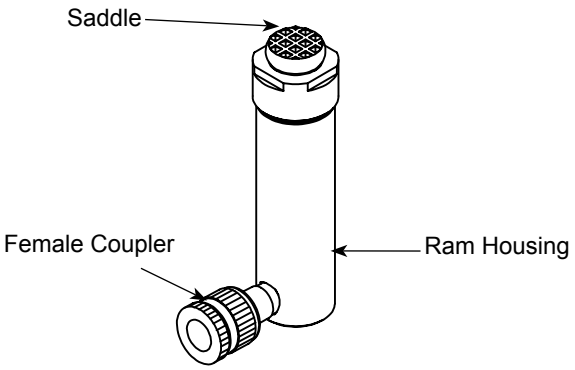

Figure 1- Model B65141 Components

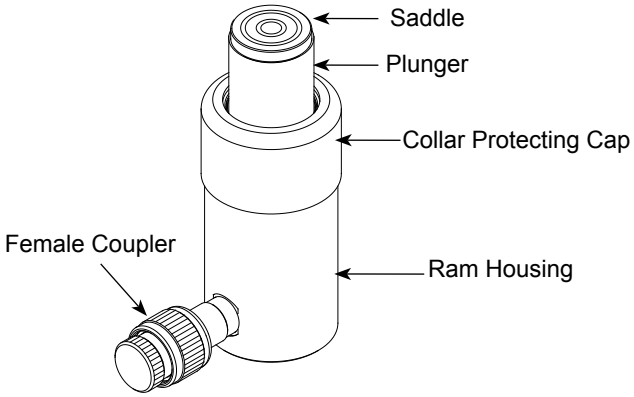

Figure 2- Regular Ram Components (models B65441, B65446, B65449, B65553, B65555, & B65746).

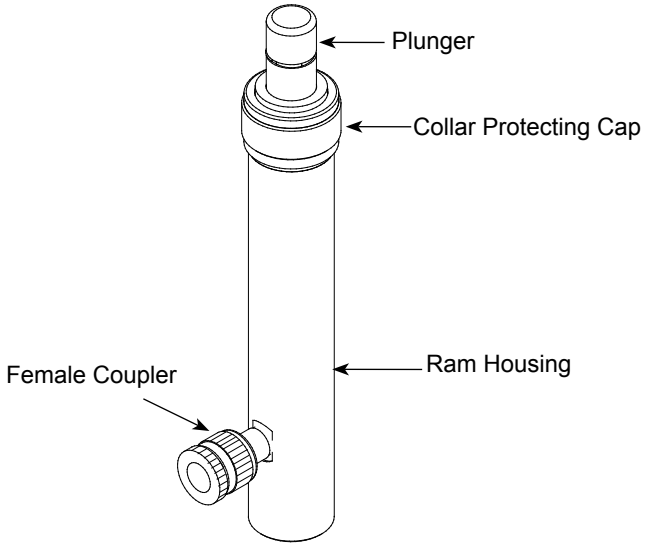

Figure 3- Porto-Power Ram Components (models B65150 & B65452)

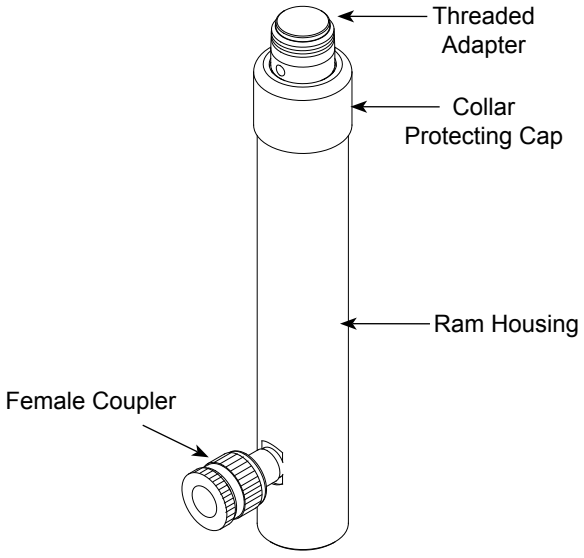

Figure 4- Threaded Ram Components (models B65142, B65442, B65444 & B65740).

⚠ WARNING

Failure to comply with the following warnings may result in **personal injury** as well as **property damage**.

- Study, understand, and follow all instructions provided with and on this device before use.
- The user must be a qualified operator familiar with the correct operation, maintenance, and use of rams.

Wear protective gear when operating hydraulic equipment.

This device is **NOT** suitable for use as **support** device! As the load is lifted, use blocking and cribbing to guard against a falling load. Stay clear of a lifted load before it is properly supported. Never rely on hydraulic pressure to support a load.

Crush Hazard. Keep hands and feet away from ram and workpiece during operation.

- Do not exceed rated capacity of the ram any equipment in the system. The ram is designed for a max. pressure of 10,000 psi.
- Do not connect a ram to a pump with higher pressure rating.
- Do not subject ram to a shock loads, a load dropped suddenly, causing the system pressure to exceed rated pressure.

The system operating pressure must not exceed the pressure rating of the lowest rated component in the system. Install a pressure gauge or other load measuring instrument to monitor the operating pressure. Burst hazard exists if hose, connection or any other component in the system exceed its rated pressure.

Avoid damaging hydraulic hose. Do not allow hose to kink, twist, curl, crush, cut or bend so tightly that fluid flow within the hose is blocked or reduced. Periodically inspect the hose for wear.

Do not pull, position or move ram setup by the hose. Use carrying handle or other means of safe transport.

Do not handle pressurized hoses. Never attempt to grasp a leaking pressurized hose. Ensure to release the system pressure before disconnecting hydraulic hose or connections.

Hydraulic fluid can ignite and burn. Keep hydraulic equipment away from flames and heat. Excessive heat will soften seals, resulting in fluid leaks. Heat also weakens hose materials.

Ram must be on a stable base which is able to support the load while pushing or lifting. Use shims, friction material or constrains to prevent slippage of the base or load. Ensure ram is fully engaged into/onto adapters, extension accessories.

Center load on ram. Distribute load evenly across the entire saddle surface. Do not off-center loads on a ram. The load can tip or the ram can “kick out”.

Never try to disassemble a hydraulic ram, refer repairs to qualified, authorized personal. Contact Porto-power tech service for authorized service center.

Do not subject hose to sharp objects or heavy impact.

Hose material or seals must not come in contact with corrosive materials such as battery acid, creosote-impregnated objects and wet paint. Never paint a coupler or hose.

- No alteration shall be made to the ram.
- Use only factory authorized fasteners, accessories and hydraulic fluid.

BEFORE USE

1. Before using this product, read the owner's manual completely and familiarize yourself thoroughly with the product, its components and recognize the hazards associated with its use.
2. Verify that the product and the application are compatible.
3. Inspect before each use. Do not use if bent, broken, leaking or damaged components are noted.
4. Replace worn or damaged parts and assemblies with Porto-Power Blackhawk automotive authorized replacement parts only. Lubricate as instructed in Maintenance Section.
5. Ensure method of confirming load is accurate and working properly. Have gauge or load cell accuracy verified by qualified personnel on a yearly basis.
6. Rams should be stored where protected from the elements, abrasive dust, and damage. These rams should be stored in the vertical position.

INSTALLATION

IMPORTANT! Use an approved, high-grade pipe sealant to seal all hydraulic connections.

1. Remove the dust cover and rubber plug from coupler.
2. Inspect all threads and fittings for signs of wear or damage, and replace as needed.
3. Clean all threads and fittings.
4. Connect hydraulic hose from hydraulic pump to the ram coupler. Ensure that there are no fluid leaks.
5. Install in-line pressure gauge.
6. Check for leaks in system and have repaired by qualified personnel.

Note: The use of ram attachments or extensions reduces the ram capacity by at least 50% per attachment/ extension.

Before operating the pump, tighten all hose connections with proper tools. Do not overtighten. Connections should only be tightened securely and leak-free. Overtightening can cause premature thread failure or high pressure fittings to burst.

Before repairs are made, depressurize ram.

Tips for hydraulic hoses & fluid transmission lines:

- Avoid short runs of straight line tubing. Straight line runs do not provide for expansion and contraction due to pressure and/or temperature changes.
- Reduce stress in tube lines. Long tubing runs should be supported by brackets or clips.

OPERATION

Operate the hydraulic pump to advance and retract the ram. **Do not** continue pumping when ram is fully extended or retracted. Internal pressure will build up and may damage the seal of the ram.

To help prevent material fatigue if the ram is to be used in a continuous application, the load should not exceed 85% of the rated capacity.

Your ram, hose(s), couplings and pump all must be rated for the same maximum operating pressure, correctly connected and compatible with the hydraulic fluid used. An improperly matched system can cause the system to fail.

All personnel must be clear before lowering load.

MAINTENANCE

1. Inspect hoses and connections daily. Replace damaged components immediately with Porto-power Replacement Parts only.
2. Tighten connections as needed. Use pipe thread sealing compound when servicing connections.
3. Always use clean, approved hydraulic fluid and change as recommended or sooner if the fluid becomes contaminated (never exceed 400 hours). Follow pump manufacturers instructions for changing and adding hydraulic fluid. Use only good quality hydraulic fluid. We recommend Hein-Werner HW93291 or equivalent when using with hand pump or air pump; Mobil DTE 15M or equivalent when using with electric pump. **Never** use brake fluid, transmission fluid, turbine oil, motor oil, alcohol, glycerin etc. Use of other than good quality hydraulic oil will void warranty and damage the ram, pump, hose etc.

Lubrication & Cleaning

1. Any exposed threads (male or female) must be cleaned and lubricated regularly, and protected from damage. Lubricate with light machine oil.
2. If a ram has been exposed to rain, snow, sand, airborne abrasive, or any corrosive environment, it must be cleaned, lubricated, and protected immediately after exposure. Daily clean exposed ram with clean cloth dampened with light machine oil. Protect exposed ram from the elements at all times.

Storage

Rams should be stored in vertical position in a dry, protected area, not exposed to corrosive vapor, dust or other harmful elements. When a ram has not been used for a period of 4 months, it should be connected to a pump and fully extended, then retracted a minimum of 5 times. This cycle will lubricate the plunger wall, reducing the possibility of corrosion and damage there of.

How to remove faulty coupler:

If ram does not retract, secure load by other means. Depressurize pump and hose. Remove the ram from application. Disconnect and replace with new coupler.

How to bleed air from system:

Place pump at a higher elevation than the hose and ram as shown in figure 5 below. Operate pump to fully extend and retract the ram 2 or 3 times. The objective is to “float the air bubbles up hill and back to the pump reservoir. Follow pump instruction manual to bleed the air from pump reservoir. On most pump, pressurized air can be escaped by simply opening the oil filler plug/screw.

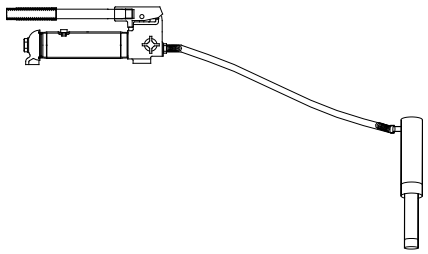

Figure 5 - Illustration to bleed air from system

TROUBLESHOOTING GUIDE

The following information is intended as an aid in determining if problem exists. For repair service, contact Porto-Power authorized service center in your area.

Symptom	Possible Causes	Corrective Action
Erratic action	• Air in system or pump cavitation. • External leakage in ram. • Ram sticking or binding.	• Vent the system. (refer to figure 5) • Contact service center. • Contact service center.
Ram will not extend, or respond to pressurized fluid	• Overload condition. • Loose couplers. • Faulty couplers. • Oil level in pump is low. • Pump not operating. • Air-locked pump.	• Remedy overload condition. • Tighten couplers. • Replace both female and male couplers. • Fill and bleed the system. • Check pump's operating instructions. • Prime pump per pump operating instructions.
Ram extends only partially	• Oil level in pump is low. • Overload condition. • Ram is sticking or binding	• Fill and bleed the system. • Remedy overload condition. • Contact service center.
Ram moves slower than normal	• Loose connection or coupler. • Restricted hydraulic line or fitting. • Pump not working correctly. • Ram seals leaking.	• Tighten connection or coupler. • Clean and replace if damaged. • Check pump's operating instructions. • Contact service center.
Ram responds to pressurized fluid, but system does not maintain pressure	• Overload condition. • Pump or valve malfunctioning. • Ram seals leaking.	• Remedy overload condition. • Check pump's operating instructions. • Contact service center.
Oil leaks from ram	• Worn or damaged seals.	• Contact service center.
Ram will not retract or retracts slower than normal	• Malfunctioning coupler, damaged application. • Pump reservoir overfilled. • Ram damage internally	• **Secure load by other means**. **Depressurize** pump and hose, remove application and replace coupler. • **Secure load by other means**. **Depressurize** pump and hose, remove application, then drain fluid to proper level. • Contact service center.
Ram will not fully extend	• Oil level in pump is low.	• **Secure load by other means**. **Depressurize** pump and hose, remove application, then add fluid to proper level.
Poor performance	• Oil level in pump is low. • Air trapped in system.	• Ensure proper oil level. • Vent the system. (refer to figure 5)

REPLACEMENT PARTS

Not all components of the rams are replacement items, but are illustrated as a convenient reference of location and position in the assembly sequence. When ordering parts, give model number, serial number and description below. Call or write for current pricing: SFA Companies 10939 N. Pomona Ave. Kansas City, MO 64153, U.S.A. Tel:(816)891-6390 Fax:(816)891-6599 E-Mail: sales@blackhawk-automotive.com.

Replacement Parts For Models B65141, B65553 and B65441:

Item#	Part# for B65141	Part# for B65553	Part# for B65441	Description	Qty.
1	N/A			Housing	1
2	N/A			Plunger	1
3	120-3-1100-406	H05-3-4200-105	H10-3-4200-105	Saddle Assy.	1
4	-			O-ring	1
5	H02-6-1804-109	H05-6-1804-100	H10-5-1804-208	Upper Bearing	1
6	-	*		Dust Seal	1
7	-	*		Bolt	1
8	-	*		Special Washer	1
9	-	H05-4-0143-105	H10-4-0202-209	Return Spring	1
10	H02-6-1204-105	H05-6-1204-106	H10-5-1204-204	Bearing	1
11	*			Back-up Ring	1
12	*			U-cup	1
13	-	644-1-0060-200		Bolt	1
14	-	H05-6-2305-107	H10-6-2305-100	Thread Protecting Cap	1
15	B69477		-	Coupler, Female (1/4" NPTF)	1
	-		B65582	Coupler, Female (3/8" NPTF)	1
(*)	H02-3-9901-109	H05-3-9901-100	H10-3-9902-105	Repair Kit	-

(*) - Indicates items included in , and available only as part of Repair Kit

N/A - Part is not available, replace entire ram.

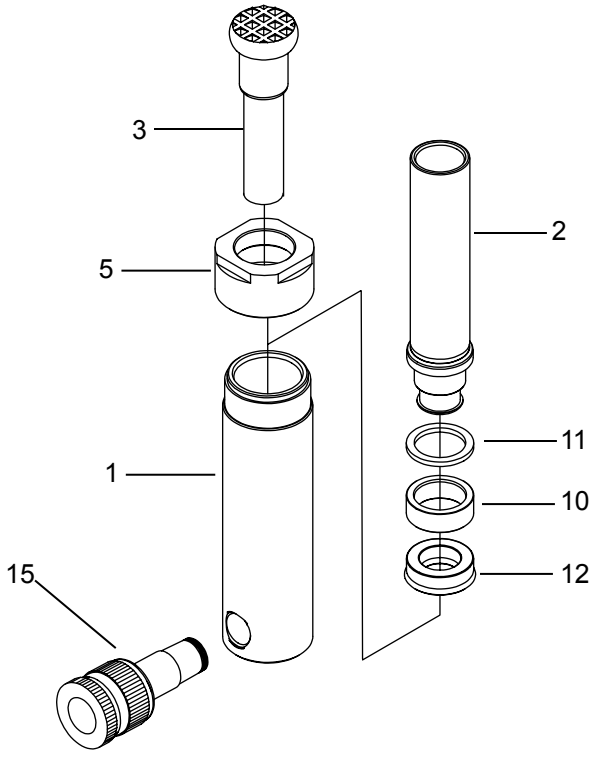

Figure 6 - Replacement Parts Illustration for Model B65141

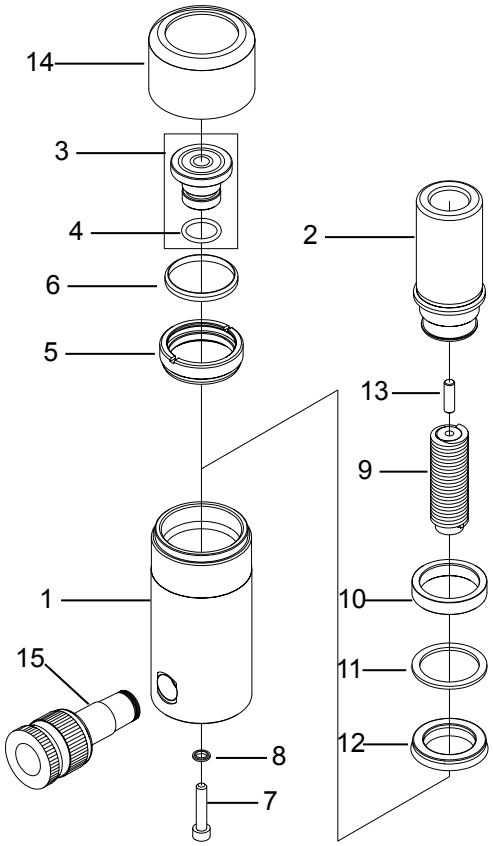

Figure 7 - Replacement Parts Illustration for Models B65553 and B65441

Replacement Parts For Models B65555, B65446, B65449 and B65746:

Item#	Part# for B65555	Part# for B65446	Part# for B65449	Part# for B65746	Description	Qty.
1	N/A				Housing	1
2	N/A				Plunger	1
3	H05-3-4200-105	H10-3-4200-105		H25-3-4200-101	Saddle Assy.	1
4	*				O-ring	1
5	H05-6-1804-100	H10-5-1804-103		H25-5-1804-100	Upper Bearing	1
6	*				Dust Seal	1
7	*				Bolt	2
8	*				Special Washer	2
9	H05-4-0145-109	H10-4-0206-106	H10-4-0210-107	H25-4-0206-109	Return Spring	1
10	H05-6-1204-106	H10-5-1204-109		H25-5-1204-102	Bearing	1
11	*				Back-up Ring	1
12	*				U-cup	1
13	H05-6-2305-107	H10-6-2305-100		H25-6-2305-103	Thread Protecting Cap	1
14	B69477	-			Coupler, Female (1/4" NPTF)	1
	-	B65582			Coupler, Female (3/8" NPTF)	1
(*)	H05-3-9901-100	H10-3-9901-103		H25-3-9901-106	Repair Kit	-

(*) - Indicates items included in , and available only as part of Repair Kit
N/A - Part is not available, replace entire ram.

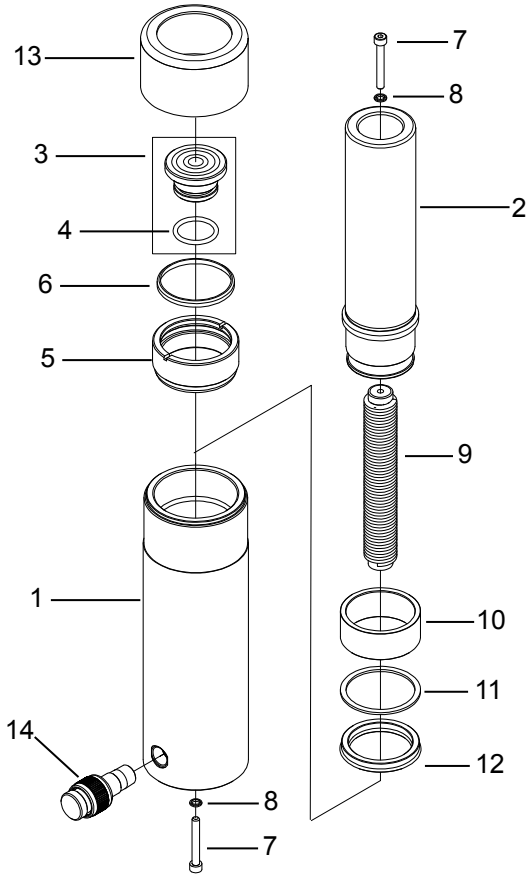

Figure 8 - Replacement Parts Illustration for Model B65555, B65446, B65449 and B65746

Replacement Parts For Models B65150 and B65452

Item#	Part# for B65150	Part# for B65452	Description	Qty.
1	N/A		Plunger	1
2	431-6-2202-106	430-6-2202-109	Collar	1
3	434-6-1804-100	H11-6-1208-104	Upper Bearing	1
4	*		Bolt	2
5	522-2-0145-108	522-2-0130-000	Return Spring	1
6	431-6-2102-203	B10-6-1205-107	Snap Ring	1
7	H05-6-1204-207	H10-5-1204-109	Bearing	1
8	*		Back-up Ring	1
9	*		U-cup	1
10	N/A		Housing	1
11	B69477	B65582	Coupler, Female	1
12	431-6-2305-207	430-6-2305-200	Protecting Cap	1
13	427-6-4301-304	430-6-4302-406	Spring	1
(*)	434-3-9903-104	435-3-9904-103	Repair Kit	-

(*) - Indicates items included in , and available only as part of Repair Kit
N/A - Part is not available, replace entire ram.

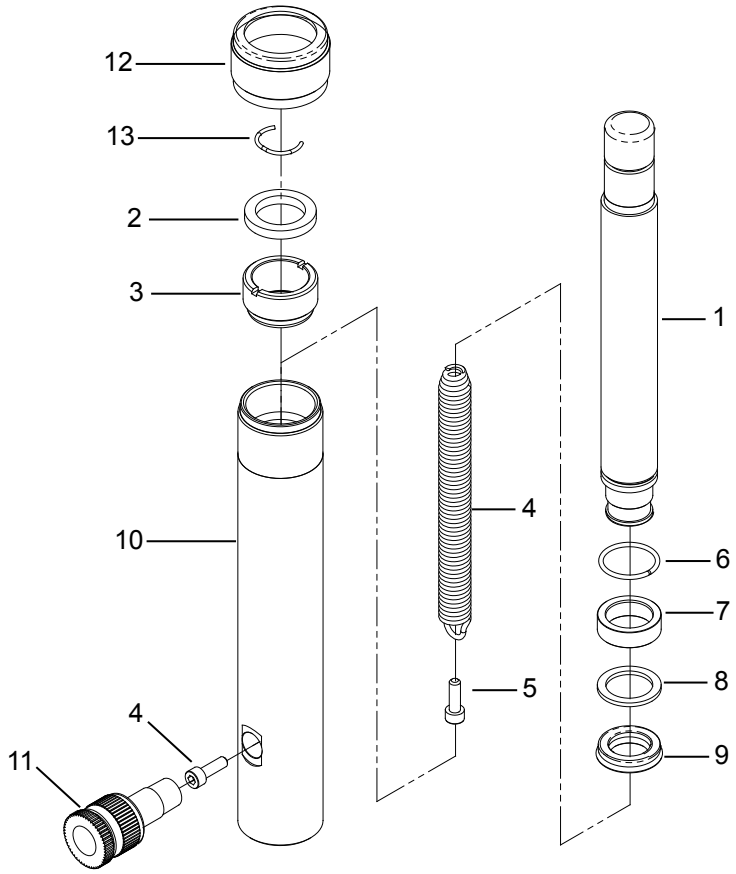

Figure 9 - Replacement Parts Illustration for Model B65150 and B65452

Replacement Parts For Models B65142, B65442, B65444 and B65740

Item#	Part# for B65142	Part# for B65442 & B65444	Part# for B65740	Description	Qty.
1	N/A			Plunger	1
2	*			Dust Seal	1
3	H05-6-1804-100	H10-5-1804-103	H25-5-1804-100	Upper Bearing	1
4	H05-5-1103-104	H10-5-1103-107	H25-5-1103-100	Adapter	1
5	*			Bolt	2
6	*			Special Washer	2
7	H05-6-1204-106	H10-5-1204-109	H25-5-1204-102	Bearing	1
8	*			Back-up Ring	1
9	*			U-cup	1
10	N/A			Housing	1
11	B69477	-		Coupler, Female (1/4 NPTF)	1
	-	B65582		Coupler, Female (3/8 NPTF)	1
12	H05-6-2305-107	H10-6-2305-100	H25-6-2305-103	Protecting Cap	1
13	H05-4-0145-109	H10-4-0206-106 (for B65442); H10-4-0210-107 (for B65444)	H25-4-0205-107	Return Spring	1
(*)	H05-3-9903-104	H10-3-9903-107	H25-3-9903-100	Repair Kit	-

(*) - Indicates items included in , and available only as part of Repair Kit
N/A - Part is not available, replace entire ram.

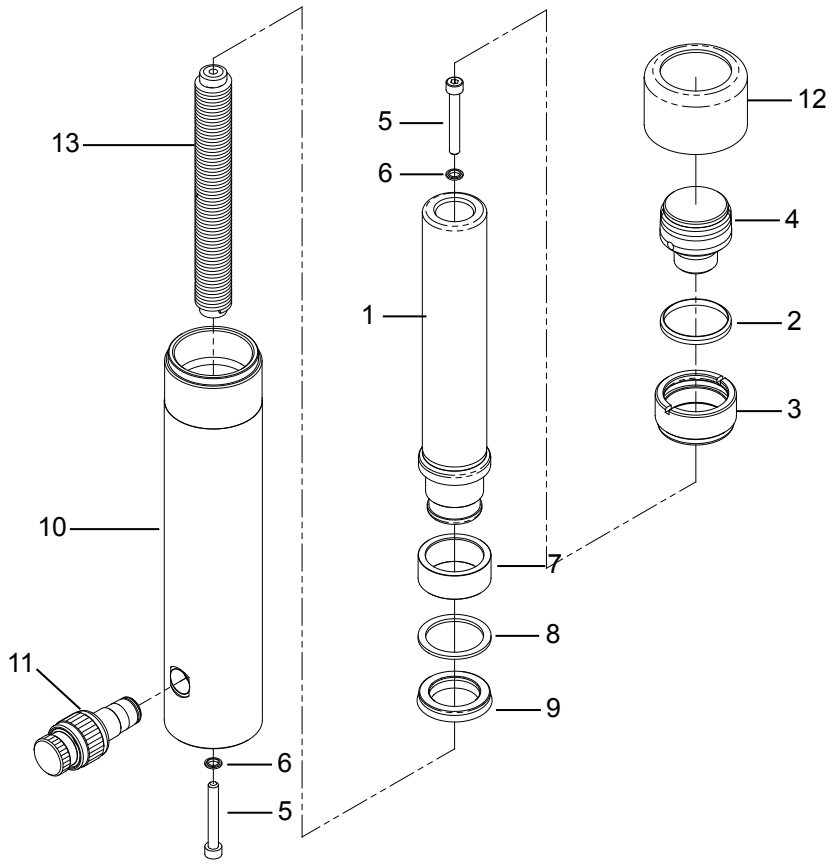

Figure 10 - Replacement Parts Illustration for Model B65142, B65442, B65444 and B65740

ONE YEAR LIMITED WARRANTY

For a period of one (1) year from date of purchase, SFA Companies will repair or replace, at its option, without charge, any of its products which fails due to a defect in material or workmanship under normal usage. This limited warranty is a consumer's exclusive remedy.

Performance of any obligation under this warranty may be obtained by returning the warranted product, freight prepaid, to SFA Companies Warranty Service Department, 10939 N. Pomona Ave., Kansas City, MO 64153.
Except where such limitations and exclusions are specifically prohibited by applicable law.

(1) THE CONSUMER'S SOLE AND EXCLUSIVE REMEDY SHALL BE THE REPAIR OR REPLACEMENT OF DEFECTIVE PRODUCTS AS DESCRIBED ABOVE.
(2) SFA COMPANIES SHALL NOT BE LIABLE FOR ANY CONSEQUENTIAL OR INCIDENTAL DAMAGE OR LOSS WHATSOEVER.
(3) ANY IMPLIED WARRANTIES, INCLUDING WITHOUT LIMITATION THE IMPLIED WARRANTIES OF MERCHANTABILITY AND FITNESS FOR A PARTICULAR PURPOSE, SHALL BE LIMITED TO ONE YEAR, OTHERWISE THE REPAIR, REPLACEMENT OR REFUND AS PROVIDED UNDER THIS EXPRESS LIMITED WARRANTY IS THE EXCLUSIVE REMEDY OF THE CONSUMER, AND IS PROVIDED IN LIEU OF ALL OTHER WARRANTIES, EXPRESS OR IMPLIED.
(4) ANY MODIFICATION, ALTERATION, ABUSE, UNAUTHORIZED SERVICE OR ORNAMENTAL DESIGN VOIDS THIS WARRANTY AND IS NOT COVERED BY THIS WARRANTY.

Some states do not allow limitations on how long an implied warranty lasts, so the above limitation may not apply to you. Some states do not allow the exclusion or limitation of incidental or consequential damages, so the above limitation or exclusion may not apply to you. This warranty gives you specific legal rights, and you may also have other rights which vary from state to state.

SFA Companies
10939 N. Pomona Ave. Kansas City, MO 64153
816-891-6390
sales@blackhawk-automotive.com