562-596 5479

BIG RED MODEL JSA-250HD

2½ TON HYDRAULIC FLOOR JACK

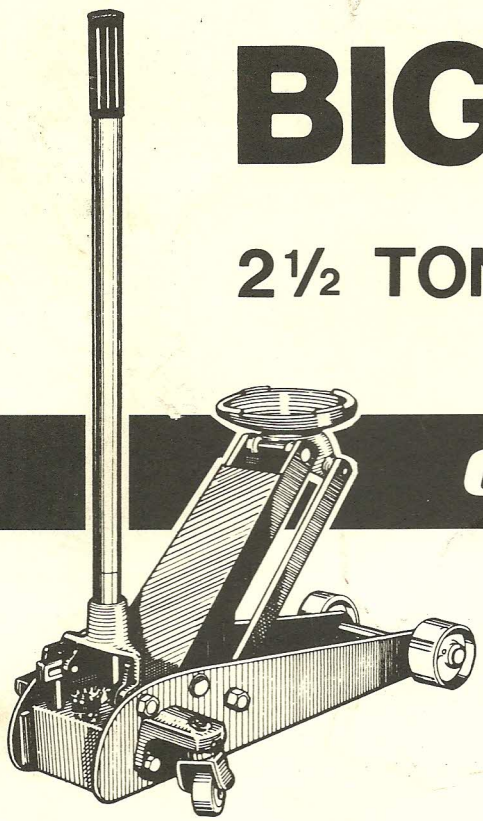

OPERATING INSTRUCTIONS

IMPORTANT:

READ THIS MANUAL CAREFULLY BEFORE PUTTING THIS JACK INTO USE.

I. SIGNIFICANT DESIGN FEATURES

- **SAFETY** – Extra strength construction – wide frame for better load distribution; Large Saddle and large Front Wheels for easier handling, better stability; Advanced Hydraulic design with built-in automatic protection against overload and over-extension of Ram stroke.
- **PERFORMANCE** – Compact, lightweight & highly mobile; large diameter Plunger for faster rising action; Top quality caster bearings for smooth & safe movement.
- **LONG LIFE** – Ram & Plunger in heat-treated polished chrome; with special Dust seals for protection against dirt & moisture.

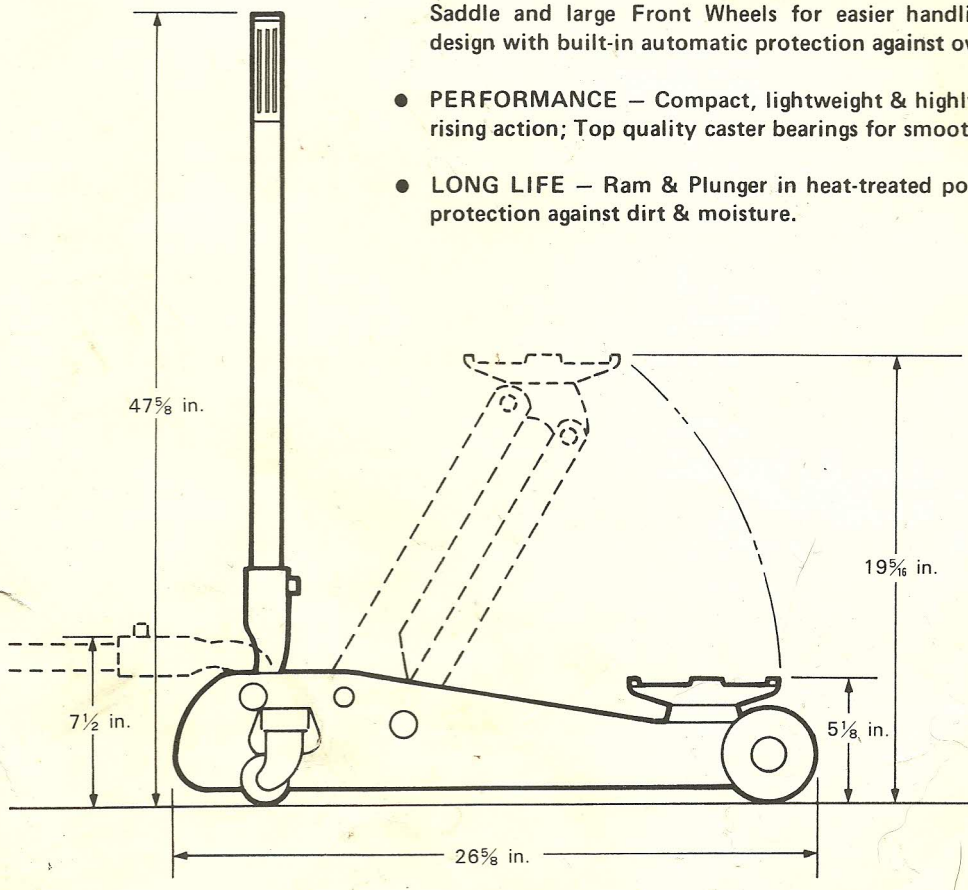

II. SPECIFICATIONS

Capacity (tons)	Net Weight (lbs.)
2½	99

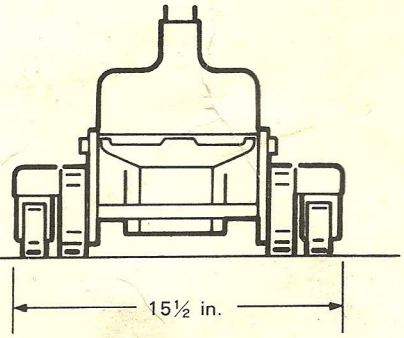

BIG RED HYDRAULICS

Los Angeles, California 90023

HYDRAULIC FLOOR JACK - 2½ TON CAPACITY
REPAIR PARTS

PARTS ARE AVAILABLE IN ASSEMBLIES ONLY

Parts No.	Description	Parts No.	Description
4-0	Swivel caster ass'y	2-1	Saddle
1-0	Front wheel ass'y	11-0	Handle fork ass'y
12-0	Handle gear ass'y	15-0	Hydraulic power unit repair kit
10-0	Release valve ass'y	12-24	Handle bolt
12-20	Handle ass'y	7-3	Oil filler plug

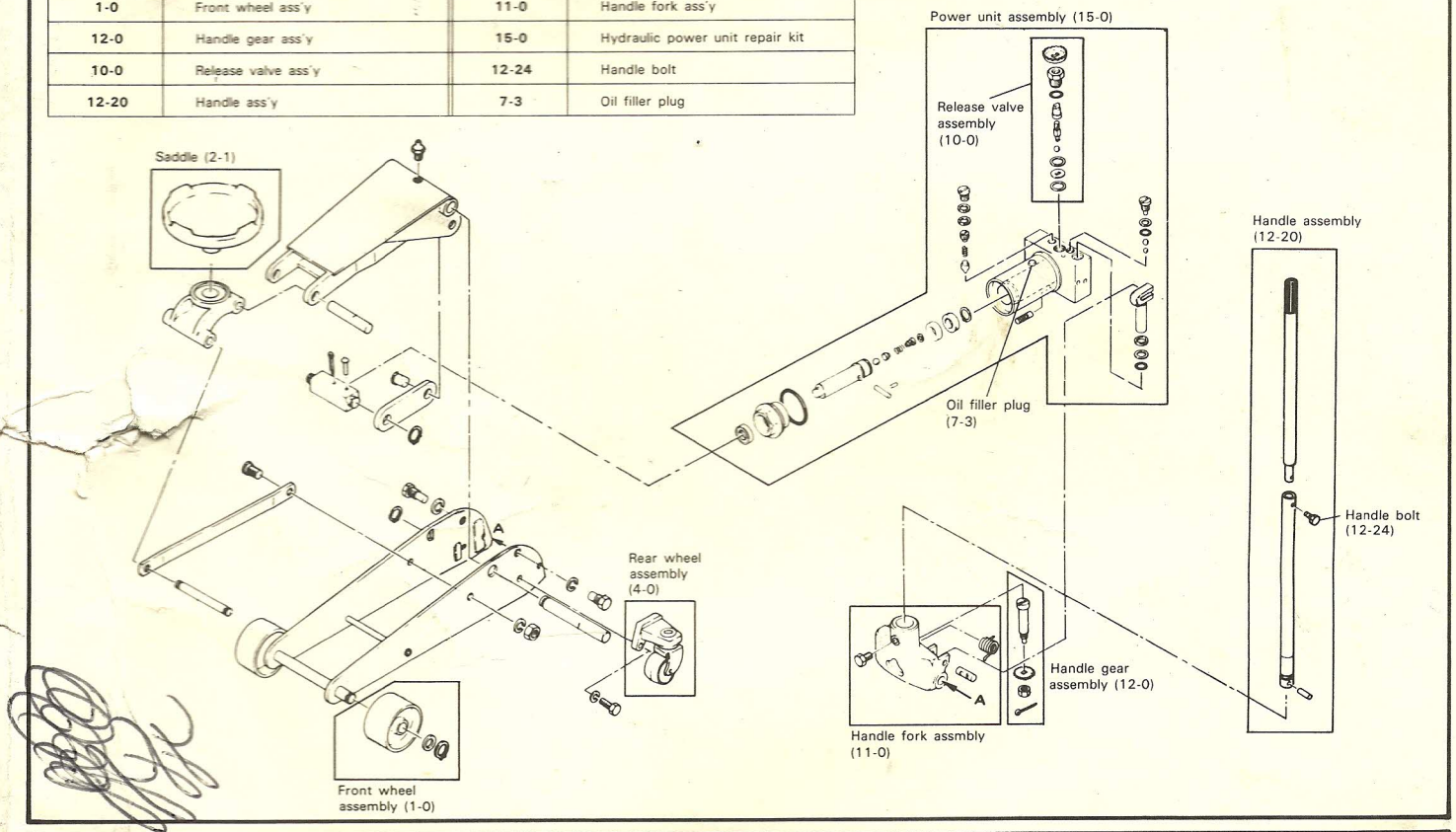

HYDRAULIC POWER UNIT REPLACEMENT INSTRUCTIONS

A. DISASSEMBLING PROCEDURES

❶Lift up the arm up to 7-7/8 inches, and remove spring **(13-3)** and cotter pin **(3-7)**.
❷Take out handle assembly
❸Loosen handle shaft(A) **(11-4)**, handle shaft(B) **(11-5)** and take out handle fork **(11-3)**.
*CAUTION: Do not pull out pump plunger**(8-1)** when removing handle fork **(11-3)**.
❹Loosen bolts **(4-8)** of the frame **(13-1)** fixing caster bracket **(4-4)**.

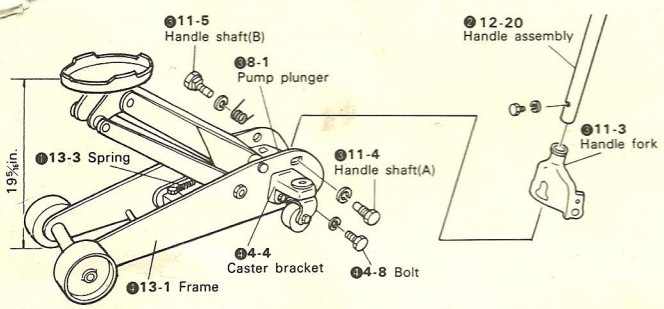

❺Fall down the jack sideways. Then, pull out the power unit assembly and replace it by new one.

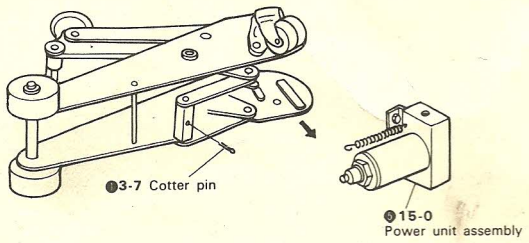

B. ASSEMBLING PROCEDURES

Please reverse the process of disassembling Procedures.

CAUTION:
1) When inserting spring **(11-7)** into handle shaft (B), keep spring **(11-7)** pushing and then screw in handle shaft (B) **(11-5)**.**(Fig.1)**
2) When assembling handle fork **(11-3)** after new power unit assembly is set up, put plunger connecting pin **(11-1)** into pump plunger **(8-1)**.**(Fig.1)**
3) Tighten the bolt **(4-8)** after confirmation of the handle rotation easily at the lowest position. **(Fig.1)**
4) When setting the new power unit assembly, extend the Piston rod by approx. 3 inches. **(Fig.2)**

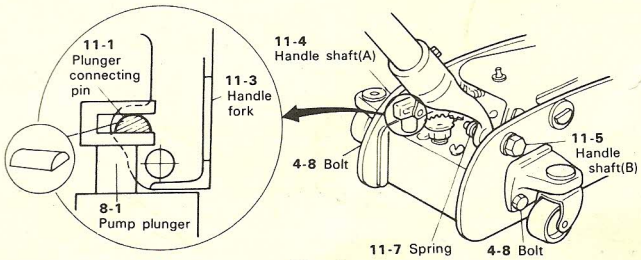

Fig. 1

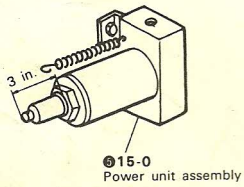

Fig. 2

IV. MAINTENANCE PROCEDURES

This Floor Service Jack is among the finest available on the market and will give you many years of trouble-free operation if properly maintained. The instructions below will help you carry out a thorough preventive maintenance program.

MAINTAINING OIL LEVEL

IMPORTANT: When adding or replacing oil, always use a good grade, Hydraulic Jack Oil (or transmission oil, turbine oil, etc.). Avoid mixing types of oil. DO NOT use Brake Fluid, Alcohol, Glycerine, detergent motor oil, or dirty oil. Improper fluid can cause serious internal damage to Jack.

Adding Oil: With Saddle fully lowered & jack on level ground, remove Filler Cap. Oil level should be approx. 3/16" below cap hole. If low, add oil as needed.

Replacing Oil: for better performance & long life, replace oil supply once a year. To drain oil, remove Filler Plug & Release Valve. BE VERY CAREFUL not to permit dirt or foreign matter to get into the system.

LUBRICATION

Add grease to Upper Arm Grease Fitting every 3 months.

PREVENTING RUST

Check Ram & Plunger every 3 months for any signs of rust or corrosion. Clean as needed and wipe with an oily cloth.
When not using the jack, always leave the Saddle & Pump Plunger all the way down.

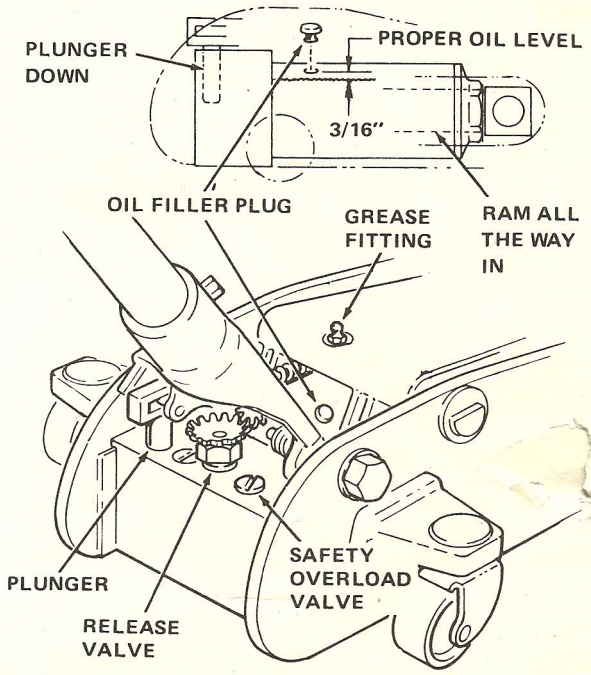

V. TROUBLE SHOOTING (USING JACK WITHIN RATED LOAD CAPACITY)

TROUBLE	POSSIBLE CAUSE	REMEDY
Will not lift load at all	1) No Oil in system 2) Release Valve not closed 3) Delivery Valve and/or By-Pass Valve not functioning 4) Defective Packings ("O" rings)	1) Fill to prescribed level 2) Turn handle clockwise tightly 3) Check for dirt or foreign matter – clean 4) Replace Packings
Will lift load only part way	5) Oil level low	5) Fill to prescribed level
Will lift load, but will not hold	6) The following Valve or Valves leaking: (a) Suction Valve, (b) Delivery Valve, (c) Release Valve, (d) By-Pass Valve 7) Packings worn out or defective	6) Inspect Valves – clean and adjust as needed 7) Replace Packings
Jack will not lower	8) Release Valve stuck – probably dirt or foreign matter	8) Transfer load & clean Release Valve
Poor lifting	9) Defective Pump Packings and/or Valves malfunctioning. 10) Dirty Oil 11) Air in Hydraulic System	9) Clean Valves, replace Packings 10) Change Hydraulic Oil 11) Purge Air from system

III. OPERATION OF JACK

To purge any air from the hydraulic system, open Release Valve (by turning handle counter-clockwise), then operate pump handle several times.

RAISING THE JACK

1. Close Release Valve TIGHTLY (by turning handle clockwise)
2. Position jack under load so that saddle will contact load firmly and is centered so it cannot slip.
3. Operate jack handle until saddle approaches contact with load. Once again check to see that saddle is correctly positioned.
4. Raise load to desired height. Transfer to Jack Stands if load is to be held up for an extended period.

CAUTION

THIS JACK IS DESIGNED FOR JACKING PURPOSE ONLY. POSITION JACK AT RIGHT ANGLE (90°) TO THE VEHICLE. AFTER JACKING, ALWAYS USE SAFETY STANDS TO SUPPORT LOAD BEFORE MAKING REPAIRS. ***FOR YOUR SAFETY***-DO NOT OVERLOAD THIS JACK BEYOND ITS RATED CAPACITY.

LOWERING THE JACK

Open Release Valve VERY SLOWLY (by turning handle counter-clockwise). When Release Valve is opened, saddle can be easily lowered by the spring tension inside the frame.

CAUTION: Keep hands or feet away from the hinge mechanism of the jack.

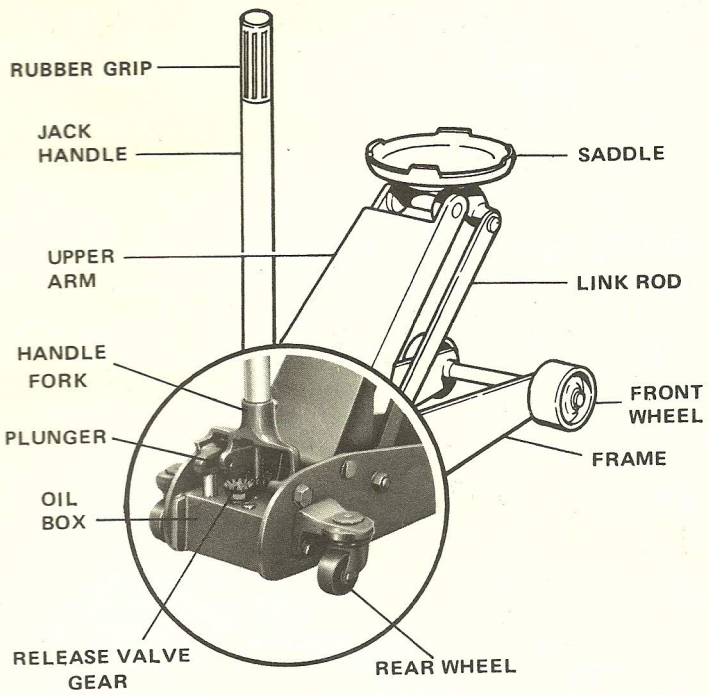

GENERAL NOMENCLATURE

HYDRAULIC SYSTEM PARTS

- Ⓐ JACK HANDLE
- Ⓑ PLUNGER
- Ⓒ TANK, RESERVOIR
- Ⓓ OIL STRAINER
- Ⓔ SUCTION VALVE
- Ⓕ DELIVERY VALVE
- Ⓖ CYLINDER
- Ⓗ RELEASE VALVE
- Ⓘ GEAR-DRIVE, RELEASE VALVE
- Ⓙ GEAR-DRIVEN, RELEASE VALVE
- Ⓚ SAFETY OVERLOAD VALVE
- Ⓛ BY-PASS VALVE
- Ⓜ RELEASE SPRING
- Ⓝ RAM

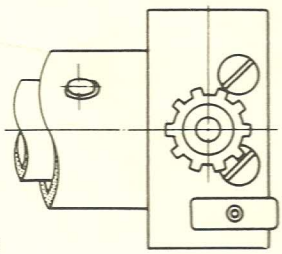

OPERATING PRINCIPLES

With Release Valve Ⓗ TIGHTLY CLOSED:

1. Upward stroke draws oil from Reservoir Tank Ⓒ thru Suction Valve Ball Ⓔ into Plunger Cavity. Hydraulic pressure keeps Valve Ⓕ closed, keeping oil in cylinder.
2. Downward stroke of Plunger Ⓑ forces oil into Cylinder thru Delivery Valve Ball Ⓕ. Ram Ⓝ is forced out, raising saddle.

   If load exceeds rated capacity, oil is automatically released back into Reservoir thru Safety Overload Valve Ⓚ.
3. When Ram Ⓝ reaches maximum stroke, oil is by-passed back into Reservoir thru By-Pass Valve Ⓛ, thus preventing over-extended Ram Stroke.

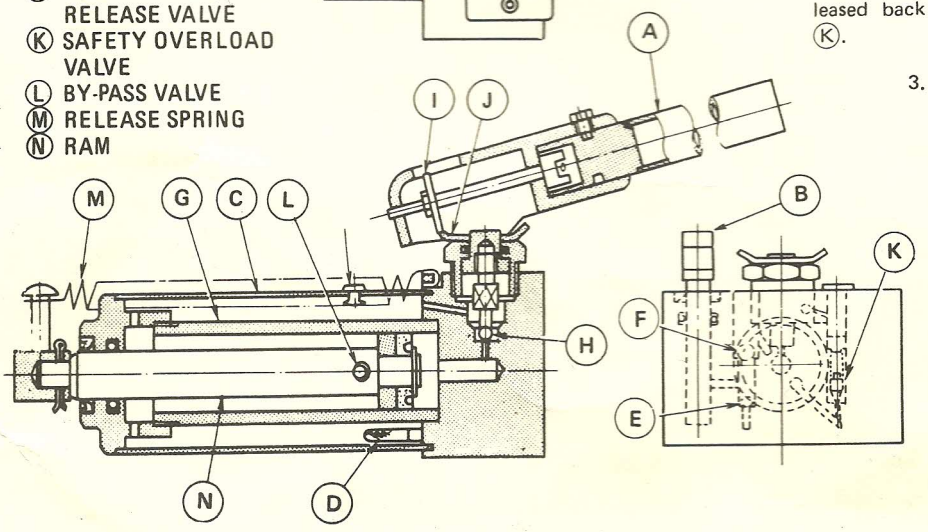

When Release Valve Ⓗ is opened, oil is allowed to flow back into Reservoir, releasing hydraulic pressure on Ram and permitting saddle to be lowered.