Hydraulic Transmission Jacks

Operating Instructions & Parts Manual

Model Number	Capacity
Atd-7435	1100 Lb.
Atd-7436	2000 Lb.
Atd-7437	3000 Lb.

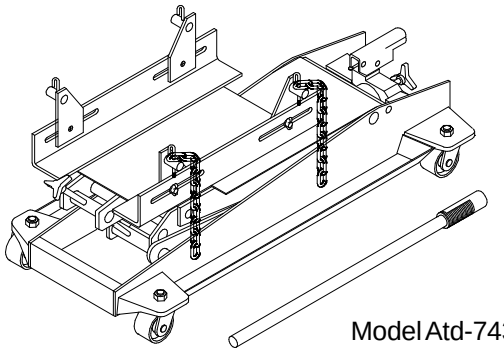

Model Atd-7435

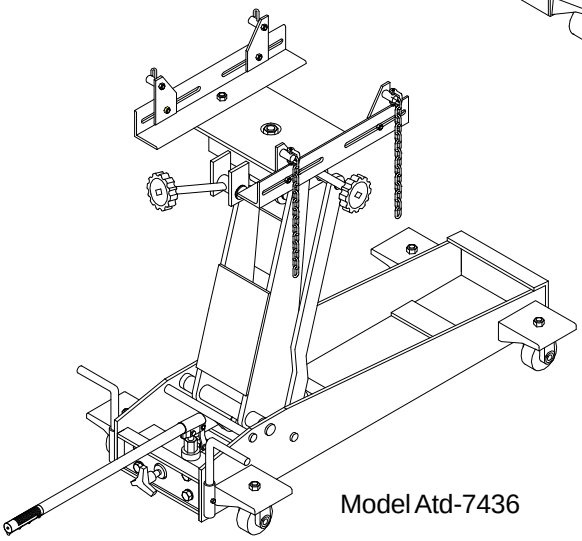

Model Atd-7436

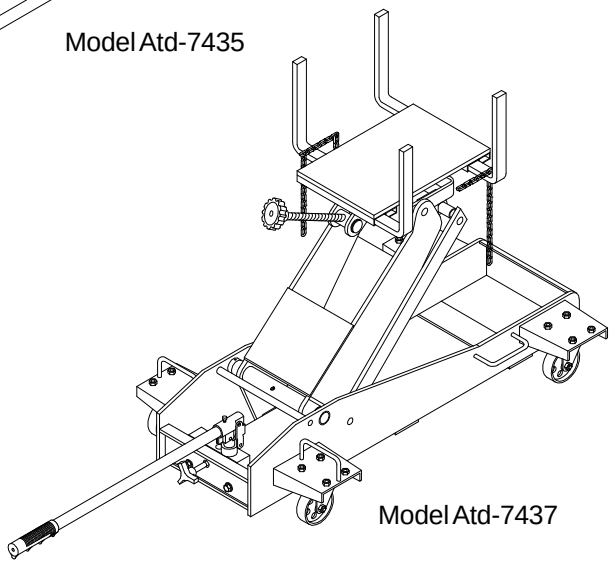

Model Atd-7437

Atd Tools Inc.
160 Enterprise Drive, Wentzville MO 63385

ATD7435-M0
Printed in Taiwan

Save these instructions

For your safety, read, understand, and follow the information provided with and on this jack. The owner and operator of this equipment shall have an understanding of this jack and safe operating procedures before attempting to use. The owner and operator shall be aware that use and repair of this product may require special skills and knowledge. Instructions and safety information shall be conveyed in the operator's native language before use of this jack is authorized. Make certain that the operator thoroughly understands the inherent dangers associated with the use and misuse of the product. If any doubt exists as to the safe and proper use of this jack, remove from service immediately. **Inspect before each use.** Do not use if broken, bent, cracked or damaged parts are noted. Any jack that appears damaged in any way, or operates abnormally shall be removed from service immediately. If the jack has been or suspected to have been subjected to a shock load (a load dropped suddenly, unexpectedly upon it), immediately discontinue use until jack has been checked by an Atd Tools authorized service center. It is recommended that an annual inspection be done by qualified personnel. Labels and Operator's Manuals are available from manufacturer.

PRODUCT DESCRIPTION

Atd Tools Hydraulic Transmission Jacks are designed to be used as an aid in the removal and installation of automotive and light truck transmissions, transfer cases and transaxles. They are intended for use under an overhead lift or in a garage pit. These jacks comply with applicable ASME-PALD Standards.

SPECIFICATIONS

Model	Capacity	Min. Height	Max. Height	Saddle Base	Extended Saddle Area	Base Size
Atd-7435	1100 lb.	8 1/2"	24 3/4"	12 5/8" x 7 7/8"	17" x 9 3/8"	31 1/8" x 15"
Atd-7436	2000 lb.	7 7/8"	33 1/2"	14 1/4" x 8"	17" x 15 3/4"	39 3/8" x 19 1/8"
Atd-7437	3000 lb.	7 7/8"	37 1/4"	15 1/2" x 13 1/4"	24 7/8" x 19"	46 3/4" x 25 5/8"

CAUTION! Read carefully before unpacking product

SAFETY INSTRUCTIONS

BEFORE USE

1. Inspect jack before each use. Do not use if bent, broken or cracked components are noted. Ensure that casters move freely. Check for and tighten any loose assemblies.
2. Verify that the product and the application are compatible.
3. Remove oil filler plug/screw prior to initial use to confirm oil level is at or just above the inner cylinder as seen from the reservoir, fill as needed and reinstall oil filler plug/screw.

⚠ WARNING

- Study, understand, and follow all printed materials provided with/on this product before use.
- Do not exceed rated capacity.
- Use only on hard, level surfaces capable of supporting rated capacity loads.
- Use of this jack is limited to the removal, installation and transportation of transmissions, transfer cases and transaxles. Do not use a transmission jack to tilt or support a vehicle.
- Ensure the center gravity of load is centered on the saddle.
- For your safety, do not exceed 10^0 tilt angle of the saddle assembly in all directions.
- Adequately support the vehicle before starting repairs.
- Use only chains and slings provided.
- If loaded jack must be moved, make sure that the load is secured, stable and in lowest position.
- This is a lifting and lowering device only.
- Transfer load immediately to appropriate support device for service or repair.
- Shock loads may cause the sudden loss of load and/ or cause the jack to tip or flip over violently, bend or break.
- No alterations shall be made on this product
- Failure to heed these markings may result in personal injury and/or property damage.

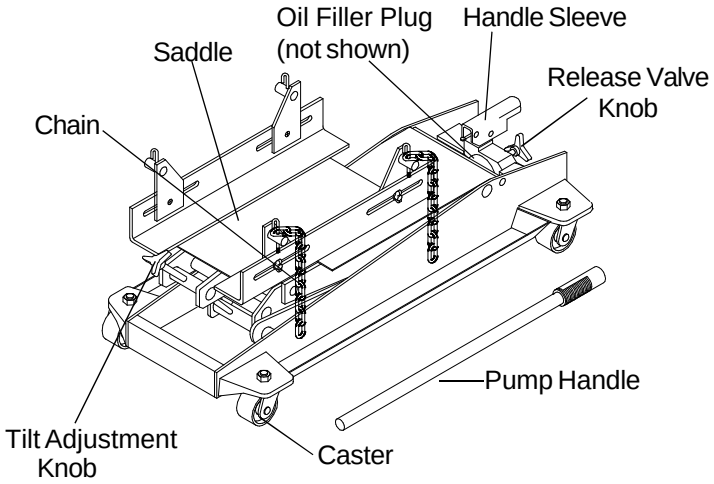

Figure 1 - Model Atd-7435 Components

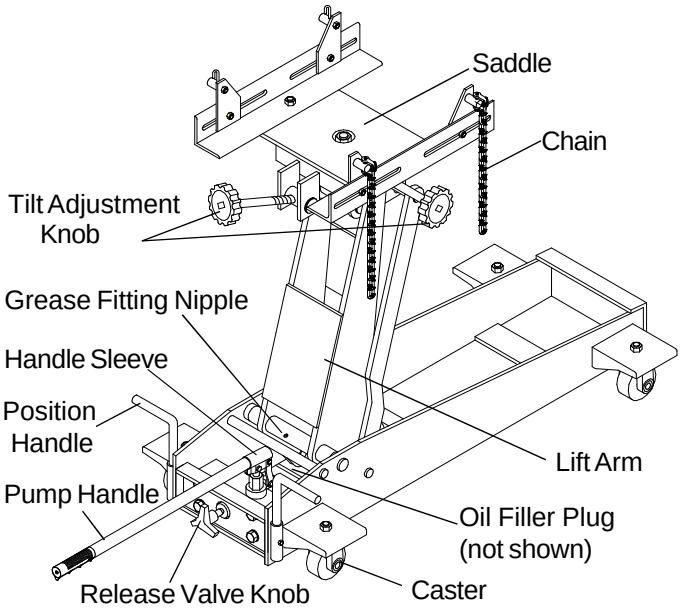

Figure 2 - Model Atd-7436 Components

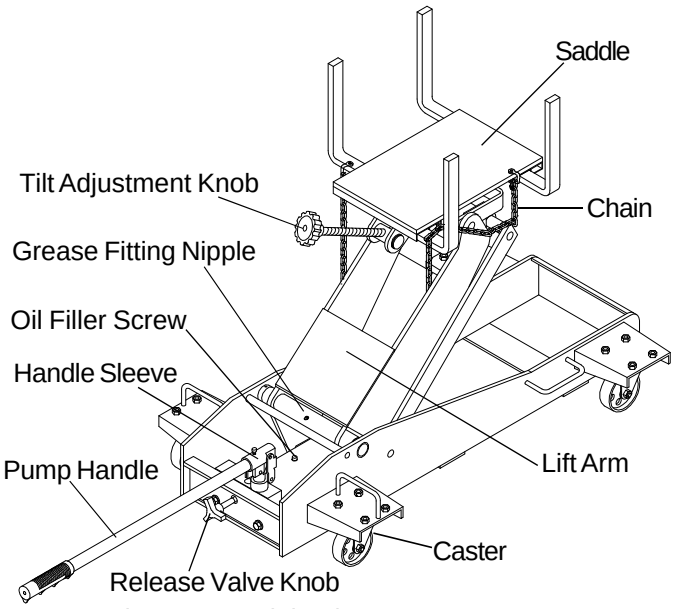

Figure 3 - Model Atd-7437 Components

ASSEMBLY

Little or no assembly is required. Refer to Figures in the manual for details in understanding the assembly and the components of your product.

OPERATION

Raise saddle:

1. Locate and close release valve by turning knob clockwise firmly, then pump the pump handle until the load is contacted.
2. Follow vehicle manufacturers recommended procedures for removing the load as outlined in vehicle service manual or repair guide.
3. Secure load with provided chains. Ensure load's center of gravity is centered on the saddle and load is stable before moving jack.

Lower saddle:

Caution! Be sure all tools and personnel are clear before lowering load. Dynamic shock loads are created by quickly opening and closing the release valve as the load is being lowered. The resulting overload may cause hydraulic system failure.

1. Slowly, gently turn the release valve knob counterclockwise, **never more than 1/2 full turn** until the load is completely lowered.
2. Immediately transfer the load to an appropriate repair fixture.

⚠ WARNING

To avoid crushing and related injuries:
NEVER work on, under or around a load supported only by a jack. Immediately transfer the load to an appropriate work station.

MAINTENANCE

Important: Use only a good grade hydraulic jack oil. Avoid mixing different types of fluid and **NEVER** use brake fluid, turbine oil, transmission fluid, motor oil or glycerin. Improper fluid can cause premature failure of the jack and the potential for sudden and immediate loss of load. We recommend Mobil DTE 13M or equivalent.

Adding oil

1. With saddle fully lowered, set jack in its upright, level position. Remove oil filler plug/ screw.
2. Fill until oil is level with the oil filler hole, reinstall oil filler plug/ screw.

Changing oil

For best performance and longest life, replace the complete fluid supply at least once per year.

1. With saddle fully lowered, set jack in its upright, level position. Remove the oil filler plug/ screw.
2. Lay the jack on its side and drain the fluid into a suitable container.

Note: Dispose of hydraulic fluid in accordance with local regulations.

3. Set jack in its level upright position.
4. Fill with oil until just below the rim of oil filler hole.
5. Reinstall oil filler plug/ screw.

Lubrication

A periodic coating of light lubricating oil to pivot points, axles and hinges will help to prevent rust and assure that wheels, casters and pump assemblies move freely.

Cleaning

Periodically check the ram for signs of rust or corrosion. Clean as needed and wipe with an oily cloth.

Note: Never use sandpaper or abrasive material on these surfaces!

Storage

When not in use, store the jack with pump piston and saddle in lowest position.

REPLACEMENT PARTS

Not all components of the jack are replacement items, but are illustrated as a convenient reference of location and position in the assembly sequence. When ordering parts, give part number and the description on page 5 thru 7. Call or write for current pricing:

Atd Tools Inc. 160 Enterprise Drive, Wentzville, MO 63385.
Tel:(636)327-9050 Fax:(636)327-9044

TROUBLESHOOTING

Symptom	Possible Causes	Corrective Action
Jack will not lift load	• Release valve not tightly closed • Overload condition	• Ensure release valve tightly closed • Remedy overload condition
Jack bleeds off after lift	• Release valve not tightly closed • Overload condition • Hydraulic unit malfunction	• Ensure release valve tightly closed • Remedy overload condition • Contact Atd Tech. Service
Jack will not lower after unloading	• Reservoir overfilled • Linkages binding	• Drain fluid to proper level • Clean and lubricate moving parts
Poor lift performance	• Fluid level low • Air trapped in system	• Ensure proper fluid level • With ram fully retracted, remove oil filler plug to let pressurized air escape, then reinstall oil filler plug
Will not lift to full extension	• Fluid level low	• Ensure proper fluid level

Replacement Parts for Model Atd-7435

Item	Part#	Description	Qty
1	505-9-0092-207	Oil Filler Plug	1
2	450-1-100-108	Hydraulic Unit	1
3	451-6-6200-108	Chain	2
4	450-3-5000-100	Saddle Assembly	1
5	450-4-5300-108	Angle Bar	2
6	450-3-5700-108	Tilt Screw	1
7	450-3-5600-205	Saddle Holder	1
8	G89-0-9003-7002	Caster Assembly	4
9	450-6-4409-107	Hydraulic Unit Pivot Pin	2
10	G52-3-9903-104	Handle	1
11	450-4-1700-104	Release Valve Assembly	1
-	450-3-9901-107	Repair Kit for Hydraulic Unit	-
-	Atd7435-L0	Product Label	-
-	Atd7435-M0	Manual	-

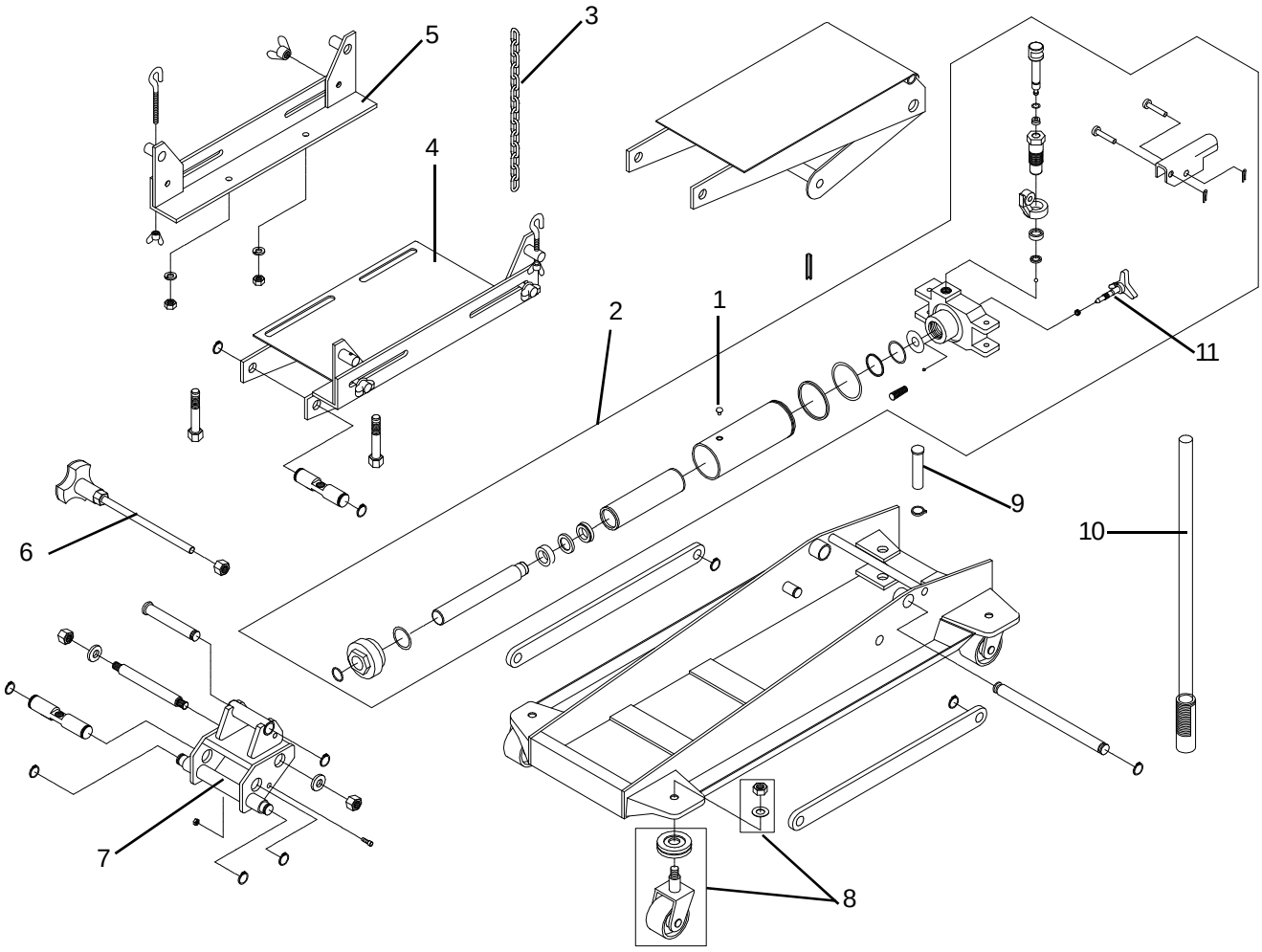

Figure 4 - Replacement Parts Illustration for Model Atd-7435

Replacement Parts for Model Atd-7436

Item	Part#	Description	Qty
1	505-9-0092-207	Oil Filler Plug	1
2	G52-1-1000-100	Hydraulic Unit	1
3	G36-6-7000-102	Chain	2
4	G52-3-4204-103	Saddle Assembly	1
5	G52-6-4207-107	Angle Bar	2
6	G52-6-4402-105	Tilt Screw	1
7	G52-6-4401-103	Tilt Screw	1
8	G52-6-1709-106	Tilt Knob	2
9	G52-3-4300-109	Saddle Holder	1
10	G52-4-5200-106	Caster Assembly	4
11	G52-3-9903-104	Handle	1
12	G52-6-1701-100	Release Valve	1
13	G34-6-1709-104	Release Valve Knob	1
14	G52-6-3004-108	Position Handle	1
15	653-1-0127-409	Hex. Bolt	6
16	653-1-0159-008	Hex. Bolt	1
-	G52-3-9901-100	Repair Kit for Hydraulic Unit	-
-	Atd7436-L0	Product Label	-
-	Atd7435-M0	Manual	-

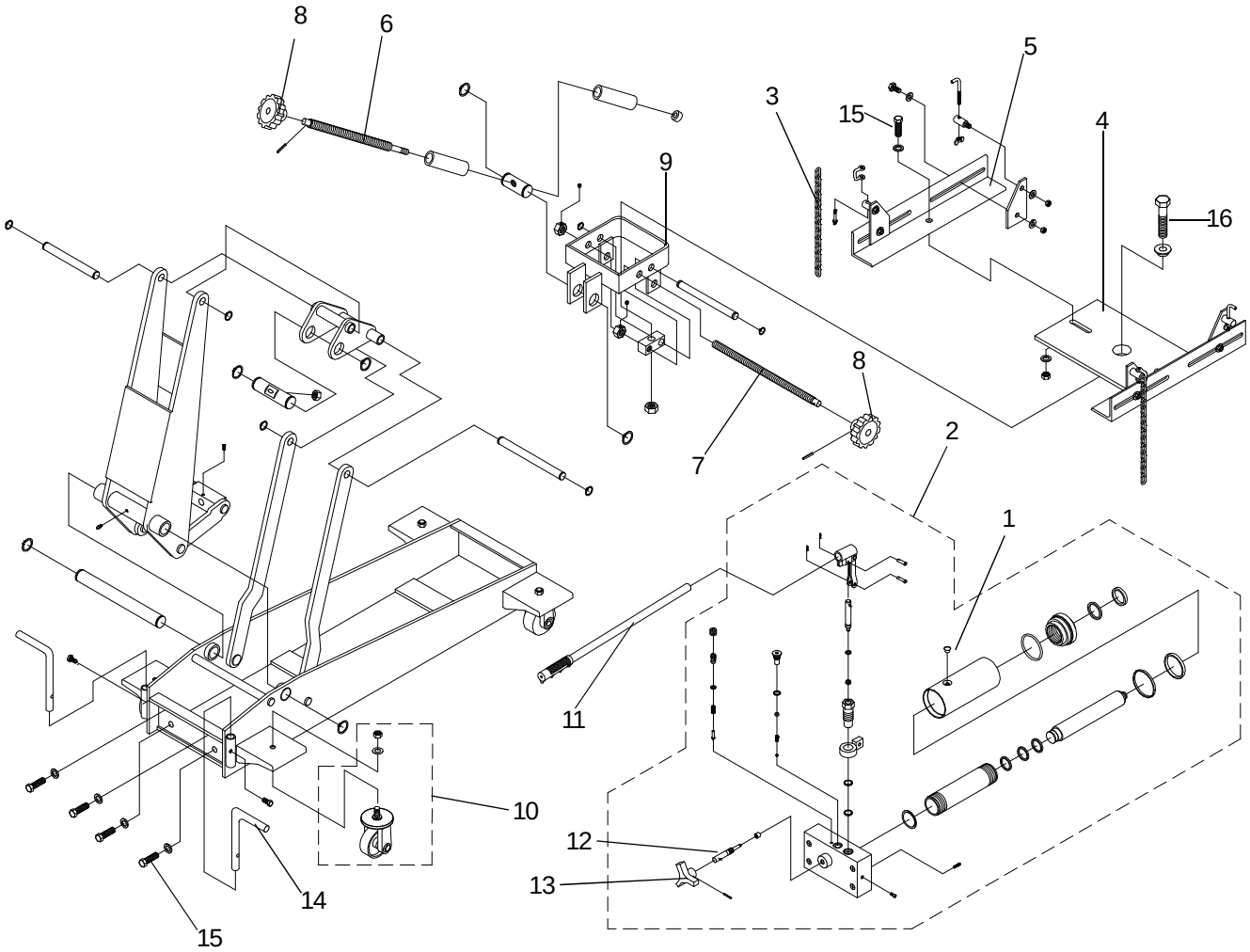

Figure 5 - Replacement Parts Illustration for Model Atd-7436

Replacement Parts for Model Atd-7437

Item	Part#	Description	Qty
1	324-4-1900-208	Oil Filler Screw	1
2	G62-1-1000-108	Hydraulic Unit	1
3	G36-6-7000-102	Chain	2
4	G52-4-4102-101	Hook & Chain	4
5	G62-3-4200-101	Saddle Plate	1
6	G62-6-4302-109	Support Bar	4
7	G62-6-4501-105	Tilt Screw	1
8	G52-6-1709-106	Tilt Knob	1
9	G62-3-4203-109	Saddle Holder	1
10	G38-4-5200-102	Caster Assembly	4
11	G46-6-2101-101	Handle	1
12	G62-6-1701-108	Release Valve	1
13	G34-6-1709-104	Release Valve Knob	1
14	653-1-0127-409	Hex. Bolt	6
-	G62-3-9901-108	Repair Kit for Hydraulic Unit	-
-	Atd7437-L0	Product Label	-
-	Atd7435-M0	Manual	-

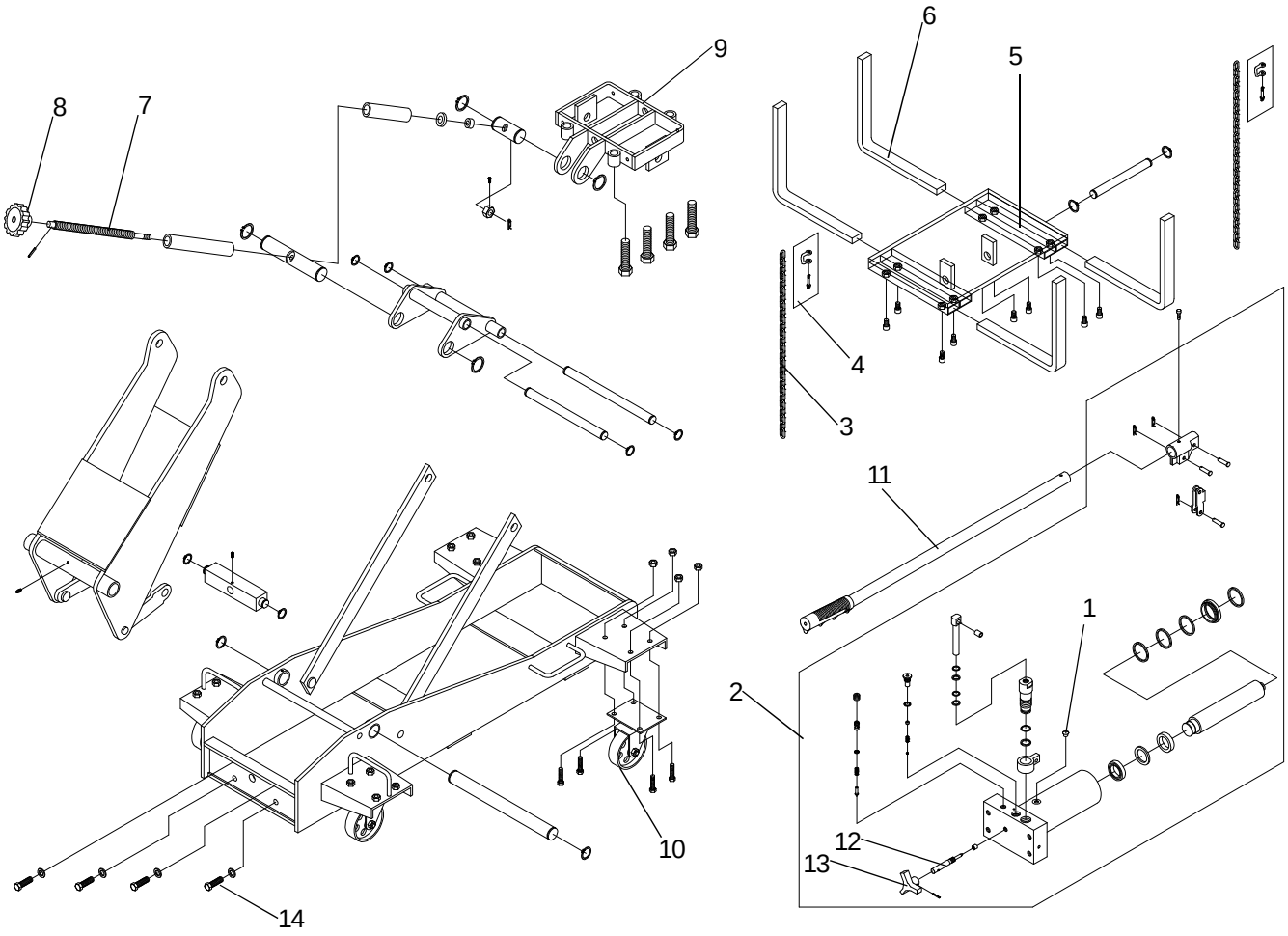

Figure 6 - Replacement Parts Illustration for Model Atd-7437

ONE YEAR LIMITED WARRANTY

For a period of one (1) year from date of purchase, **ATD Tools Inc.** will repair or replace, at its option, without charge, any of its products which fails due to a defect in material or workmanship under normal usage. This limited warranty is a consumer's exclusive remedy.

Performance of any obligation under this warranty may be obtained by returning the warranted product, freight prepaid, to **ATD Tools Inc.** Warranty Service Department,160 Enterprise Drive, Wentzville, MO 63385.

Except where such limitations and exclusions are specifically prohibited by applicable law, (1) THE CONSUMER'S SOLE AND EXCLUSIVE REMEDY SHALL BE THE REPAIR OR REPLACEMENT OF DEFECTIVE PRODUCTS AS DESCRIBED ABOVE. (2) **ATD Tools Inc.** SHALL NOT BE LIABLE FOR ANY CONSEQUENTIAL OR INCIDENTAL DAMAGE OR LOSS WHATSOEVER. (3) ANY IMPLIED WARRANTIES, INCLUDING WITHOUT LIMITATION THE IMPLIED WARRANTIES OF MERCHANTABILITY AND FITNESS FOR A PARTICULAR PURPOSE, SHALL BE LIMITED TO ONE YEAR, OTHERWISE THE REPAIR, REPLACEMENT OR REFUND AS PROVIDED UNDER THIS EXPRESS LIMITED WARRANTY IS THE EXCLUSIVE REMEDY OF THE CONSUMER, AND IS PROVIDED IN LIEU OF ALL OTHER WARRANTIES, EXPRESS OR IMPLIED. (4) ANY MODIFICATION, ALTERATION, ABUSE, UNAUTHORIZED SERVICE OR ORNAMENTAL DESIGN VOIDS THIS WARRANTY AND IS NOT COVERED BY THIS WARRANTY.

Some states do not allow limitations on how long an implied warranty lasts, so the above limitation may not apply to you. Some states do not allow the exclusion or limitation of incidental or consequential damages, so the above limitation or exclusion may not apply to you. This warranty gives you specific legal rights, and you may also have other rights which vary from state to state.

Atd Tools Inc.
160 Enterprise Drive,
Wentzville MO 63385
636-327-9050