MagicLift™ Service Jack, Low Profile

Operating Instructions & Parts Manual

Model
ATD7325

Capacity
2 Ton

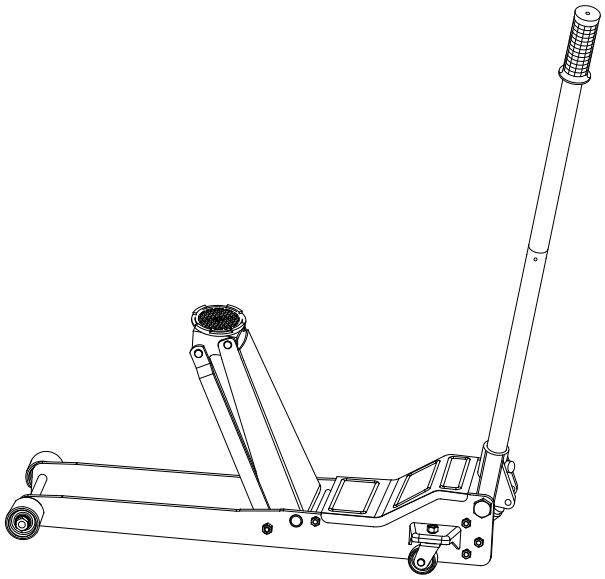

U.S. Patent No's. 6,199,379 • 5,946,912

This is the safety alert symbol. It is used to alert you to potential personal injury hazards. Obey all safety messages that follow this symbol to avoid possible injury or death.

⚠ ADVERTENCIA

- Leer, comprender, y seguir las instrucciónes antes de utilizar el aparato.
- El manual de instrucciónes y la información de seguridad deben estar comunicado en lengua del operador antes del uso.
- No seguir estas indicaciónes puede causar daños personales o materiales.

⚠ WARNING

To avoid **crushing and related injuries**:

NEVER work on, under or around a load supported only by a hydraulic jack. **ALWAYS** use adequately rated jack stands.

ATD Tools Inc.
160 Enterprise Drive, Wentzville MO 63385

Printed in China
ATD7325-M3 rev 07/10

SAFETY and GENERAL INFORMATION

Save these instructions. For your safety, read, understand, and follow the information provided with and on this jack before using. The owner and/or operator of this equipment shall have an understanding of this jack and safe operating procedures before attempting to use. The owner and/or operator shall be aware that the use and repair of this product may require special skills and knowledge. Instructions and safety information shall be conveyed in the operator's native language before use of this jack is authorized. If any doubt exists as to the safe and proper use of this jack, remove from service immediately.

Inspect before each use. Do not use if broken, bent, cracked, or damaged parts (including labels) are noted. Any jack that appears damaged in any way, operates abnormally or is missing parts, shall be removed from service immediately and the manufacturer notified. If you suspect that the jack was subjected to a shock load (a load dropped suddenly, unexpectedly upon it), immediately discontinue use until jack has been checked by a factory authorized service center (contact distributor or manufacturer for list of Authorized Service Centers). It is recommended that an annual inspection be done by qualified personnel. Labels and owner's manuals are available from manufacturer.

PRODUCT DESCRIPTION

ATD MagicLift™ Low Profile Garage Jack is designed to lift, but not support, one end of a vehicle. The jack must be used in conjunction with a pair of appropriately rated jack stands. MagicLift™ Service Jack has a unique feature, which provides fast, no load lifts to the jacking point, at which time it lifts in approximately 0.75~2" increments.

***NEVER** use a hydraulic jack as a stand-alone device. After lifting, **immediately** support the lifted vehicle with a pair of appropriately rated jack stands.*

SPECIFICATIONS

Model	Capacity	Jack Size (L x W x H)	Min. Height	Max. Height	Saddle Dia.
ATD7325	2 Ton	42-1/2" x 13-3/4" x 6-3/4"	2-1/2"	20"	4-7/8"

PREPARATION

Assembly

Insert handle into the handle sleeve. Tighten the bolt on handle sleeve to prevent accidental removal of handle while in use.

Before Use

1. Verify that the product and application are compatible, if in doubt call ATD Tools Tech. Service (636) 327-9050.
2. Before using this product, read the operator's manual completely and familiarize yourself thoroughly with the product, its components and recognize the hazards associated with its use.
3. To familiarize yourself with basic operation of this jack, locate and turn the release valve (handle):
   a. Clockwise until firm resistance is felt to further turning. This is the '**CLOSED**' release valve position used to raise the load.
   b. Counter-clockwise, but no more than 1/2 full turn from the closed position. This is the '**OPEN**' release valve position used to lower the load.
4. Check to ensure that jack rolls freely. Raise and lower the unloaded saddle throughout the lifting range before putting into service to ensure the pump operates smoothly.
5. Replace worn or damaged parts and assemblies with ATD authorized replacement parts only. Lubricate as instructed in Maintenance Section.

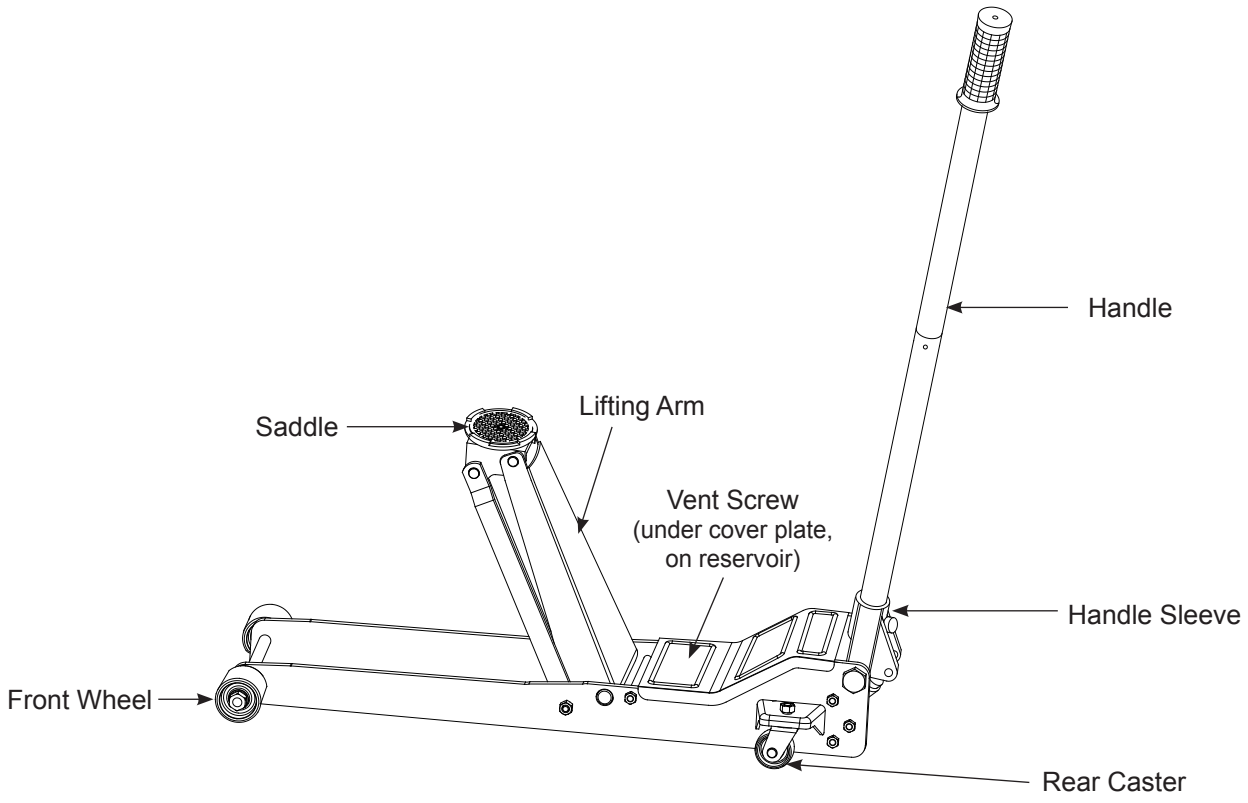

Figure 1 - ATD7325 Nomenclature

⚠ WARNING

- **Study, understand, and follow** all printed materials provided with/on this product before use.
- **Do not** exceed rated capacity.
- Use only on hard, level surface.
- **This is a lifting device only!**
- **Immediately** after lifting, support the load with **a pair** of appropriately rated jack stands.
- Lift only on areas of the vehicle as specified by the vehicle manufacturer.
- Do not move or dolly the vehicle while on the jack.
- No alterations shall be made to this product.

FAILURE TO HEED THESE MARKINGS MAY **RESULT** IN **PERSONAL INJURY AND/OR PROPERTY DAMAGE!**

⚠ WARNING

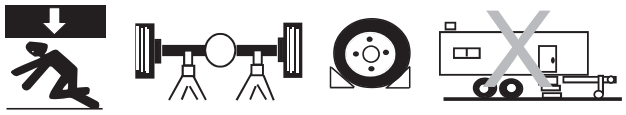

To avoid **crushing and related injuries**:

- **Never** work on, under or around a load supported only by hydraulic jack.
- **Always** use adequately rated jack stands.
- Chock each unlifted tire in both directions.
- **Do not** use this device to lift, level, lower, support nor move a house, mobile home, travel trailer, camper or any building structure.
- **Be alert** and **sober** when using this product. Do not operate under the influence of drugs or alcohol.

OPERATION

Lifting

⚠ *Only attachments and/or adapters supplied by the manufacturer shall be used. Lift only on area of the vehicle as specified by the vehicle manufacturer.*

1. Follow the vehicle manufacturer's recommended guidelines for lifting. Engage the emergency brake and chock each unlifted wheel in both directions to prevent inadvertent vehicle movement.
2. Close the release valve by turning the handle clockwise until firm resistance is felt.
3. Refer to the vehicle manufacturer owner's manual to locate approved lifting points on the vehicle. Center jack saddle under lift point.
4. Verify lift point, then pump handle to contact lift point. To lift, pump handle until load reaches desired height.
5. Transfer the load **immediately** to appropriately rated jack stands.

⚠ ***NEVER*** *use hydraulic jack as a stand alone device!* ***ALWAYS*** *transfer the lifted load* ***IMMEDIATELY*** *to a pair of appropriately rated jack stands. Use one pair of jack stands per vehicle. Rated capacity is per pair only! Do not exceed rated capacity.*

Lowering

⚠ *Be sure all tools and personnel are clear before lowering load.* ***Slowly open the release valve!*** *The more you turn the handle counter-clockwise, the faster the load will come down.* ***Maintain control*** *of the rate of speed at which the load lowers at all times!*

1. Raise load high enough to clear the jack stands.
2. Remove jack stands carefully (**always** used in pairs).
3. **Slowly** turn the handle counter-clockwise, but no more than 1/2 full turn. <u>If the load fails to lower</u>:
   a. Use another jack to raise the vehicle high enough to reinstall jack stands.
   b. Remove the malfunctioning jack and then the jack stands.
   c. Use the functioning jack to lower the vehicle.
4. After removing jack from under the load, fully lower the saddle to reduce ram exposure to rust and contamination.

MAINTENANCE

Important: Use only good grade hydraulic jack oil. Avoid mixing different types of fluid and **Never** use brake fluid, turbine oil, transmission fluid, motor oil or glycerin. Improper fluid can cause failure of the jack and the potential for sudden and immediate loss of load. We recommend Mobil DTE 13M or equivalent.

Adding oil

1. With saddle fully lowered set jack in its upright, level position. Locate and remove vent screw.
2. Fill with oil until ~3/16" above the inner cylinder as seen from the oil filler hole. If the oil level is too low, the jack will not raise to its advertised maximum height. Reinstall the vent screw.

Changing oil

For best performance, replace the complete fluid supply at least once per year.

1. With saddle fully lowered, remove the vent screw and drain the fluid into a suitable container.
2. Fill with oil until ~3/16" above the inner cylinder as seen from the oil filler hole. Reinstall vent screw.

Note: Dispose of hydraulic fluid in accordance with local regulations.

Lubrication

A periodic coating of light lubricating oil to pivot points, axles and hinges will help to prevent rust and assure that wheels, casters and pump assemblies move freely.

Cleaning

Periodically check the pump piston and ram for signs of rust/corrosion. Clean as needed and wipe with oily cloth.

Note: Never use sandpaper or abrasive material on these surfaces!

Storage

When not in use, store the jack with saddle fully lowered. This will help prevent rust and corrosion to those critical surfaces.

TROUBLESHOOTING

Symptom	Possible Causes	Corrective Action
Jack will not lift load	• Release valve not tightly closed • Load is too heavy	• Ensure release valve tightly closed • Consider higher capacity jack
Jack will lift, but not maintain pressure	• Release valve not tightly closed • Hydraulic unit malfunction	• Ensure release valve tightly closed • Discontinue use, contact ATD Technical Service
Jack will not lower after unloading	• Reservoir overfilled • Linkages binding	• Drain fluid to proper level • Clean and lubricate moving parts
Poor lift performance	• Fluid level low • Hydraulic unit malfunction	• Ensure proper fluid level • Discontinue use, contact ATD Technical Service
Will not lift to full extension	• Fluid level low	• Ensure proper fluid level

REPLACEMENT PARTS

Not all components of the jack are replacement items, but are illustrated as a convenient reference of location and position in the assembly sequence. When ordering parts, give Model number, part number and description below. Call or write for current pricing: ATD Tools Inc. 160 Enterprise Drive, Wentzville, MO 63385. Tel:(636)327-9050 Fax:(636)327-9044

Replacement Parts Illustration for ATD7325

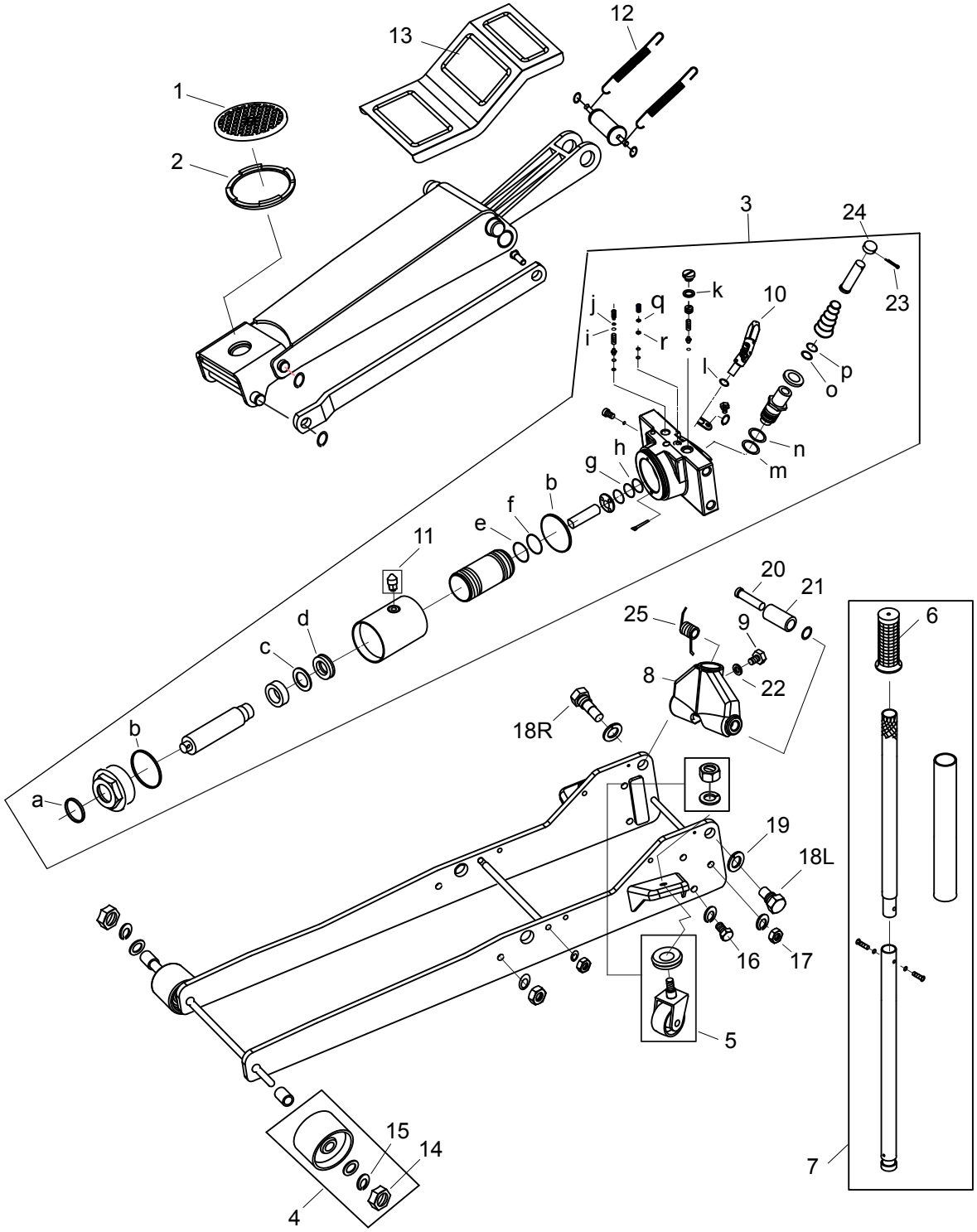

Figure 2 - Replacement Parts Illustration for ATD7325

Replacement Parts List for ATD7325

Item#	Part#	Description	Qty.
1	G86301-0001	Saddle Pad	1
2	G86301-0017	Saddle	1
3	G86308-0001	Hydraulic Unit	1
4	G86301-0004	Front Wheel Assembly	2
5	G86301-0003	Rear Caster Assembly	2
6	G86301-0008	Handle Grip	1
7	G86301-0019	Handle Assembly	1
8	G86308-0003	Handle Sleeve	1
9	G48900-0024	Bolt, M10x16	1
10	G86308-0004	U-joint	1
11	G86301-0014	Vent Screw	1
12	G86301-0012	Return Spring, Lift Arm	2
13	G86308-0005	Cover	1
14	G86301-0023	Nut, M16	2
15	G86301-0024	Spring Washer, D16	2
16	G88009-0016	Bolt, M12	1
17	G86301-0032	Nut, M12	4
18R	G59509-0016	Bolt, Handle Sleeve, RH side	1
18L	G59509-0015	Bolt, Handle Sleeve, LH side	1
19	G59305-0006	Spring Washer, D20	2
20	G73500-0011	Pin D12	1
21	G73500-0012	Roller	1
22	G59305-0005	Spring Washer, D10	1
23	G69400-0004	Spring Pin	1
24	G69400-0003	Cap, Pump Piston	1
25	G73500-0010	Return Spring, Handle	1
**	G86308-0000	Seal Kit (includes a thru r)	1
-	ATD7325-M2	Manual	-
-	ATD7325-L0	Label	-

**Repair Kit Contents:

Item	Description	Qty	Item	Description	Qty
a	O-ring	1	j	Back-up Washer	1
b	O-ring	2	k	O-ring 13x2.4	1
c	Back-up Washer	1	l	O-ring 8x1.8	1
d	U-cup	1	m	O-ring	1
e	Back-up Washer	1	n	Back-up Washer	1
f	O-ring	1	o	O-ring 17x2.65	1
g	O-ring	2	p	Back-up Washer	1
h	Washer, Metal	2	q	Back-up Washer	1
i	Oil Seal	1	r	Oil Seal	1

(**) Replacement requires special skills, knowledge, and equipment. Only an authorized service center may perform the repair and/or replacement of these items. Contact ATD technical service for list of service centers.

ONE YEAR LIMITED WARRANTY

For a period of one (1) year from date of purchase, **ATD Tools Inc.** will repair or replace, at its option, without charge, any of its products which fails due to a defect in material or workmanship under normal usage. This limited warranty is a consumer's exclusive remedy.

Performance of any obligation under this warranty may be obtained by returning the warranted product, freight prepaid, to **ATD Tools Inc.** Warranty Service Department, 160 Enterprise Drive, Wentzville, MO 63385.

Except where such limitations and exclusions are specifically prohibited by applicable law, (1) THE CONSUMER'S SOLE AND EXCLUSIVE REMEDY SHALL BE THE REPAIR OR REPLACEMENT OF DEFECTIVE PRODUCTS AS DESCRIBED ABOVE. (2) **ATD Tools Inc.** SHALL NOT BE LIABLE FOR ANY CONSEQUENTIAL OR INCIDENTAL DAMAGE OR LOSS WHATSOEVER. (3) ANY IMPLIED WARRANTIES, INCLUDING WITHOUT LIMITATION THE IMPLIED WARRANTIES OF MERCHANTABILITY AND FITNESS FOR A PARTICULAR PURPOSE, SHALL BE LIMITED TO ONE YEAR, OTHERWISE THE REPAIR, REPLACEMENT OR REFUND AS PROVIDED UNDER THIS EXPRESS LIMITED WARRANTY IS THE EXCLUSIVE REMEDY OF THE CONSUMER, AND IS PROVIDED IN LIEU OF ALL OTHER WARRANTIES, EXPRESS OR IMPLIED. (4) ANY MODIFICATION, ALTERATION, ABUSE, UNAUTHORIZED SERVICE OR ORNAMENTAL DESIGN VOIDS THIS WARRANTY AND IS NOT COVERED BY THIS WARRANTY.

Some states do not allow limitations on how long an implied warranty lasts, so the above limitation may not apply to you. Some states do not allow the exclusion or limitation of incidental or consequential damages, so the above limitation or exclusion may not apply to you. This warranty gives you specific legal rights, and you may also have other rights which vary from state to state.

ATD Tools Inc.
160 Enterprise Drive,
Wentzville MO 63385
636-327-9050