POWER TEAM
A division of SPX Corporation
2121 West Bridge Street
Owatonna, MN 55060 USA
Phone: (507) 455-7100
Tech. Services: (800) 477-8326
Fax: (800) 765-8326
Order Entry: (800) 541-1418
Fax: (800) 288-7031
International Sales: (507) 455-7150
Fax: (507) 455-7122

Form No. 13544

Parts List for:

YS-106

MODEL B
HYDRAULIC CYLINDER
Max. Capacity: 10 Ton At 9,643 PSI

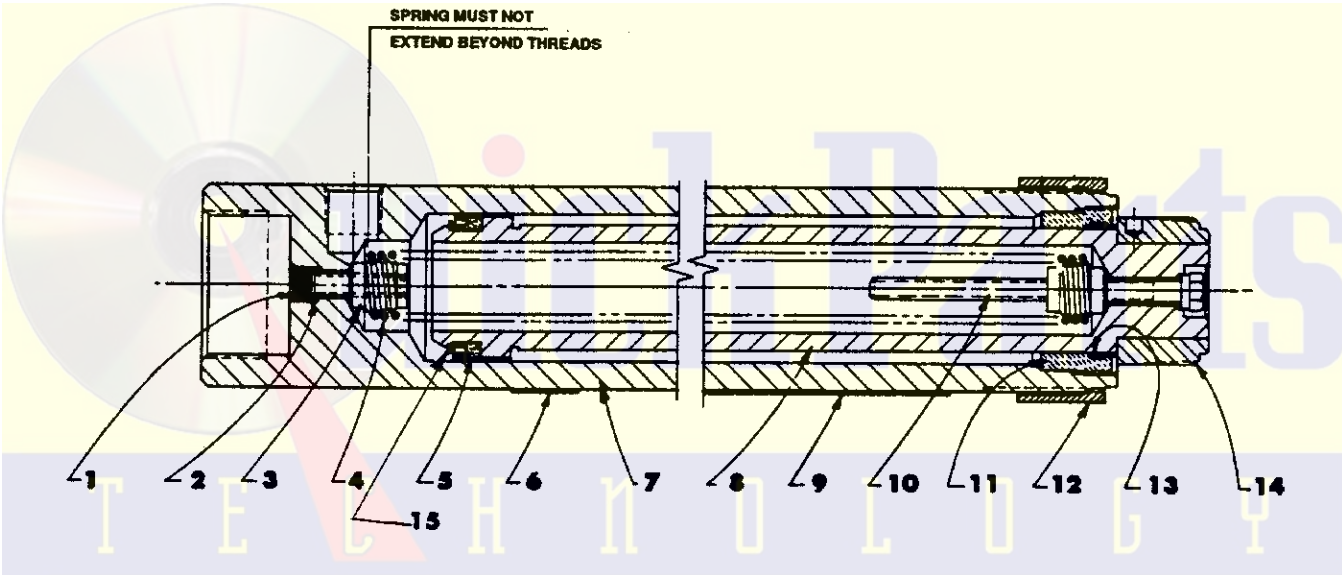

Sheet No.	**1 of 1**
Issue Date:	**8-1-69**

Litho in USA

Item No.	Part No.	No. Req'd	Description
1	10016	1	Socket Head Cap Screw (1/4-20 UNC X 1" Lg.)
2	*10442	2	Washer (3/8 X 1/4 X 1/32)
3	23976	2	Spring Retainer
4	11983	1	Extension Spring
5	*13409	1	Packing U-cup
6	11982	1	Decal
7	33196	1	Cylinder
8	33195	1	Piston
9	11280	1	Decal
10	26101	1	Screw
11	33194	1	Retainer
12	24067	1	Collar
13	*27385	1	Rod Wiper
14	26095	1	Ram Cap
15	13654	1	Retaining Ring

Part numbers marked with an asterisk (*) are contained in Repair Kit No. 27738.

QuickParts TECHNOLOGY

Refer to any operating instructions included with this product for detailed information about operation, testing, disassembly, reassembly, and preventive maintenance.

Items found in this parts list have been carefully tested and selected. **Therefore: Use only genuine Power Team replacement parts!**

Additional questions can be directed to our Technical Services Department.