POWER TEAM
A division of SPX Corporation
2121 West Bridge Street
Owatonna, MN 55060 USA
Phone: (507) 455-7100
Tech. Services: (800) 477-8326
Fax: (800) 765-8326
Order Entry: (800) 541-1418
Fax: (800) 288-7031
International Sales: (507) 455-7150
Fax: (507) 455-7122

Parts List for:

Form No. 13372

Y22-4

TWO SPEED
HYDRAULIC HAND PUMP
Max. Capacity: 10,000 PSI

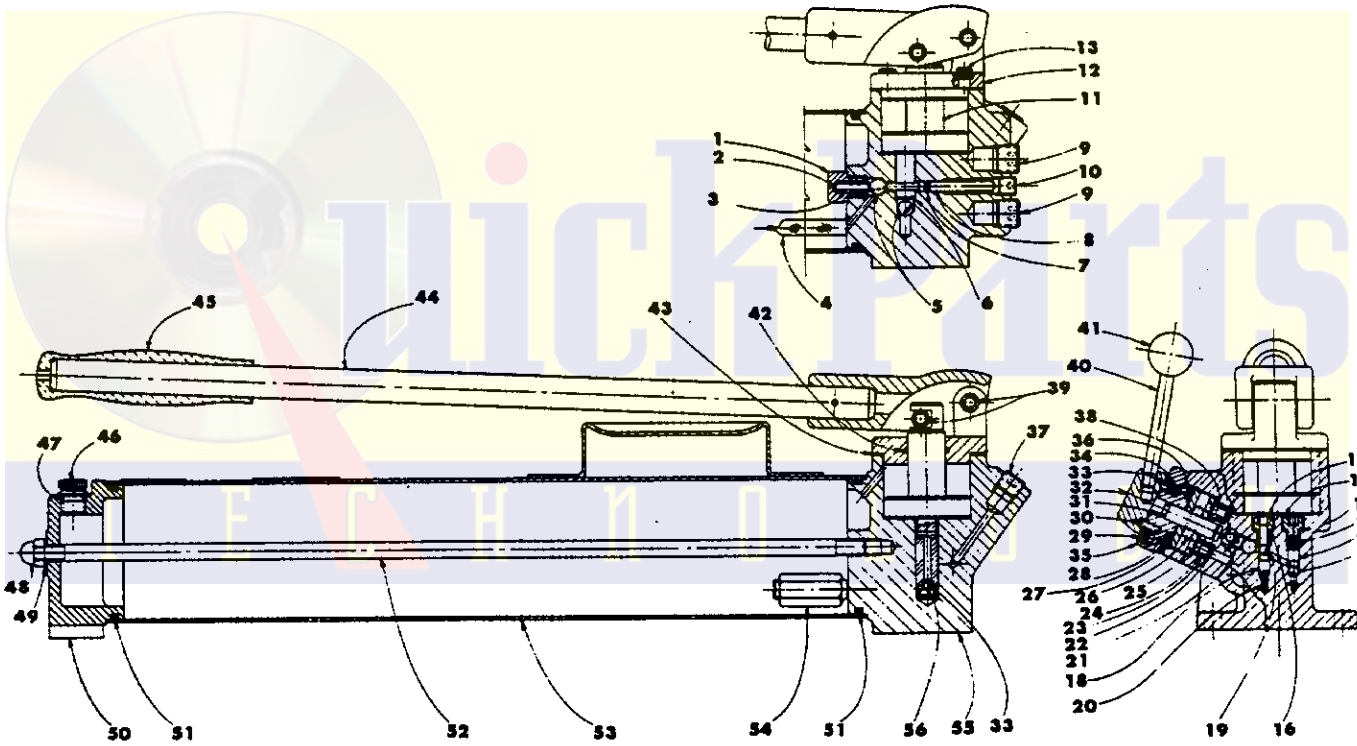

QuickParts

Sheet No.	**1 of 1**
Issue Date:	**Rev. 7-21-76**

Litho in USA

Parts List, Form No. 13372, Back sheet 1 of 1

Item No.	Part No.	No. Req'd	Description
1	**24152**	1	Cap Screw-Spring Retainer
2	**24787**	1	Pin
3	**11221**	1	Compression Spring (1/4 O.D. X 1" Lg.)
4	***24789**	1	Filter
5	***10377**	2	Ball (5/16 Dia.)
6	***11893**	1	Retaining Ring (7/16 hole)
7	***10264**	1	O-ring (1/4 X 1/8 X 1/16, -006)
8	**25030**	1	Piston
9	**11127**	2	Sq. Male Drive Plug (3/8 NPTF)
10	**10427**	1	Hex Female Drive Plug (1/8 NPTF)
11	**24146**	1	Piston Ass'y
12	**31868**	1	Pump Body Cap
13	**10006**	4	Soc. Hd. Cap Screw (1/4-20 UNC X 5/8 Lg.)
14	***24150**	1	Valve Seat
15	**21600**	1	Cap Screw (5/16-18 NC X 3/8 Lg.)
16	***11031**	2	Copper Washer (15/32 X 5/16 X 1/32)
17	***10445**	1	Compression Spring (5/32 O.D. X 3/4 Lg.)
18	**24148**	2	Ball Guide
19	***12223**	2	Ball (3/16 Dia.)
20	***12040**	1	Compression Spring (1/8 O.D. X 1/2 Lg.)
21	**11084**	1	Hex Female Drive Plug (1/16 NPTF)
22	***12187**	3	Spring Washer
23	***10266**	4	O-ring (3/8 X 1/4 X 1/16, -010)
24	***12184**	3	Backup Washer (3/8 X 1/4 X .048, -010)
25	**32071**	1	Rotor
26	***10716**	1	Roll Pin (1/4 Dia. X 3/4 Lg.)
27	**12188**	1	Bearing
28	**12189**	1	Bearing
29	**11434**	4	Soc. Hd. Cap Screw (10-24 UNC X 1/2 Lg.)
30	**11587**	1	Roll Pin (1/8 Dia. X 1/2 Lg.)
31	**10266**	4	O-ring (3/8 X 1/4 X 1/16, -010)
32	**32070**	1	Stem
33	***10375**	2	Ball (1/4 Dia.)
34	**12195**	1	Compression Spring (1/4 O.D. X 1/2 Lg.)
35	**24566WH2**	1	Valve Cover
36	***10930**	1	O-ring (1-1/2 X 1-5/16 X 3/32, -125)
37	**10479**	1	Hex Female Drive Plug (1/4 NPTF)
38	**24570**	3	Seal
39	**10415**	2	Roll Pin (3/8 Dia. X 1-3/4 Lg.)
40	**24564**	1	Stud
41	**12821**	1	Knob
42	***12900**	1	O-ring (1" X 7/8 X 1/16, -020)
43	***24640**	1	End Cap Gasket
44	**31872**	1	Handle Ass'y
45	**10904**	1	Handle Grip
46	**24132**	1	Filler Cap
47	***10300**	1	O-ring (5/8 X 15/32 X 5/64, -906)
48	**10842**	1	Hex. Cap Nut (3/8-16 UNC)
49	***12042**	1	Copper Washer (9/16 X 3/8 X 1/32)
50	**31863**	1	End Cap
51	***10872**	2	O-ring (3-1/8 X 2-7/8 X 1/8, -233)
52	**24155**	1	Tie Rod
53	**31877**	1	Reservoir Ass'y
54	**21278**	1	Relief Valve Ass'y
55	**50276**	1	Pump Body
56	***12041**	1	Retaining Ring (5/16 hole)

Part numbers marked with an asterisk(*) are contained in Repair Kit #25954.

Refer to any operating instructions included with this product for detailed information about operation, testing, disassembly, reassembly, and preventive maintenance.

Items found in this parts list have been carefully tested and selected. **Therefore: Use only genuine Power Team replacement parts!**

Additional questions can be directed to our Technical Services Department.