STATIONARY CRANE

1/2 TON CAPACITY

Model 91-803
93803, 95803
Series "K"

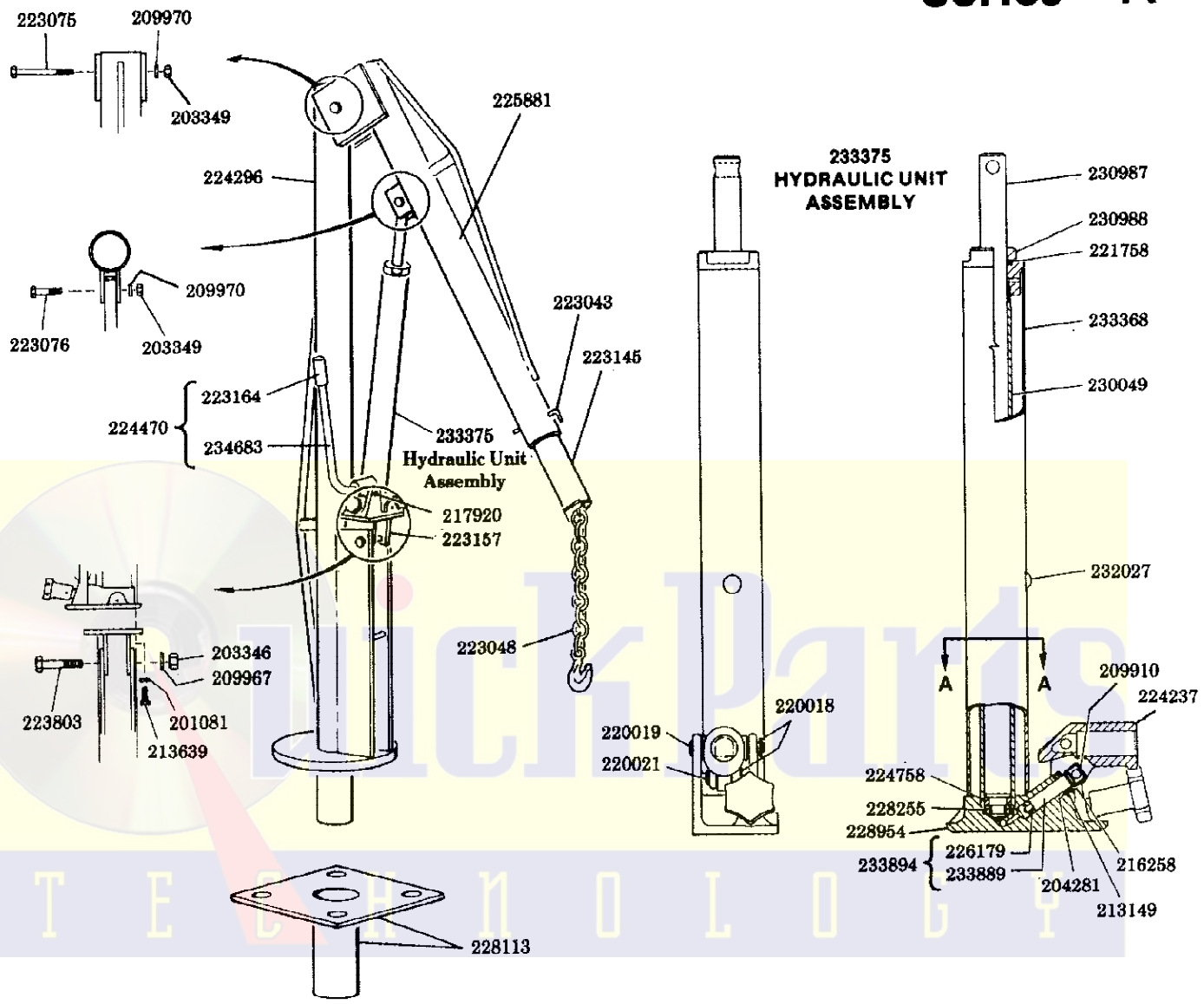

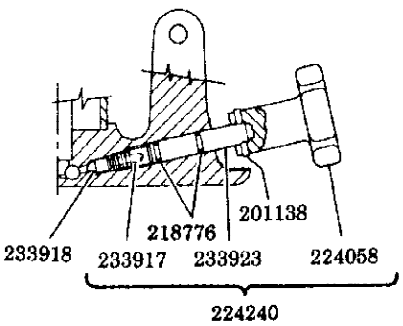

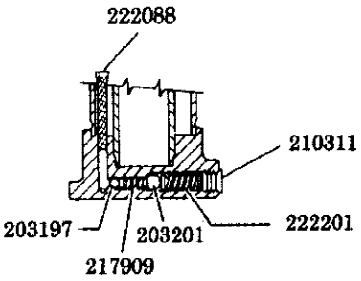

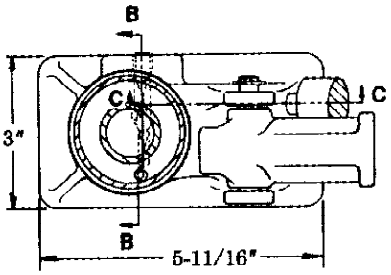

TROUBLE SHOOTING

PROBLEM	SOLUTION
1) Will not lift load 2) Will not lift full height 3) Pump feels "Spongy" under load	The Jack could be low on oil- Refer to Instruction Manual. See instruction #5 under Maintenance Instructions. The Jack could be air-bound- Open the release valve one full turn and pump the handle about six full strokes to purge air from the pump and valving.
1) Will not lift load 2) Handle raises under load 3) Handle lowers under load 4) Will not hold load	Valve might not be closing- Make certain release valve is closed. Starting with boom in fully lowered position, SLOWLY raise the boom a few feet by hand. Open release valve and let the boom descend into lowered position. Crane should now operate properly.

If the above procedures do not correct the problem, contact your nearest service depot. When submitting any jack or equipment to be repaired, be sure to state the nature of the problem and indicate whether an estimate of the repair cost is needed.

IMPORTANT: As with any hydraulic unit, this unit may occasionally become "air-bound" due to being tipped over during shipment. To purge the air from the oil lines, open the release and pump rapidly a few strokes. Close release and pump to full height, then open the release to allow the ram to descend rapidly. If the pump still seems "spongy", repeat the procedure.

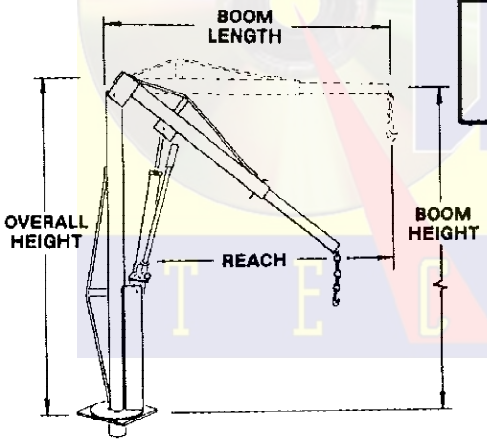

SPECIFICATIONS

BOOM POSITION	CAPACITY (lbs.)	BOOM HEIGHT		BOOM LENGTH	REACH	CHAIN SIZE	OVERALL HEIGHT
		MAX.	MIN.				
#1	1,000	81-1/2"	22"	37-1/2"	26-1/2"	5/16"	72"
#2	800	84"	17-1/2"	42"	31"	5/16"	72"
#3	600	90"	6-1/2"	53"	42"	5/16"	72"

MODEL	LABEL KIT NO.	REPAIR KIT NO.
91-803	240004	91-396
93803	240005	240501
95803	240006	240501

SERVICE PARTS

PART	QUAN.	DESCRIPTION	PART	QUAN.	DESCRIPTION	PART	QUAN.	DESCRIPTION
201081	4	Lockwasher	220019	1	Pin	224758	1	Heel plate
201138	1	Pin	220021	1	Pin	225881	1	Main boom
203197	1	Ball, 3/16" Dia.	221758	1	Quad ring	226179	1	Piston
203201	1	Ball, 5/16" Dia.	222088	1	Screen	228113	1	Mounting plate
203346	1	Nut	222201	1	Spring	228255	1	U-cup
203349	2	Nut	223043	1	Position pin	228954	1	Base
204281	1	Washer	223048	1	Lifting chain & hook	230049	1	Cylinder
209910	1	Clip	223075	1	Bolt	230987	1	Ram
209967	1	Lockwasher	223076	1	Bolt	230988	1	Nut
209970	2	Lockwasher	223145	1	Inner boom	232027	1	Plug
210311	1	Plug	223157	1	Pivot plate	233368	1	Oil tank
213149	1	Packing ring	223164	1	Grip	233375	1	Hydraulic unit assembly
213639	4	Bolt	223803	1	Bolt	233889	1	U-cup
216258	1	Cover	224058	1	Hand knob	233894	1	Pump assembly
217909	1	Spring	224237	1	Handle socket	233917	1	Spring
217920	1	Roll pin	224240	1	Release assembly	233918	1	Release valve poppet
218776	2	O-ring	224296	1	Frame	233923	1	Release stem
220018	2	Retaining ring	224470	1	Handle & grip ass'y	234683	1	Handle