LINCOLN®

MODEL 282396
STUB PUMP - "A" SERIES

3:1 RATIO, OUTPUT	6 GPM
MIN AIR PRESSURE	40 PSI
MAX AIR PRESSURE	200 PSI

SERVICE PARTS LIST

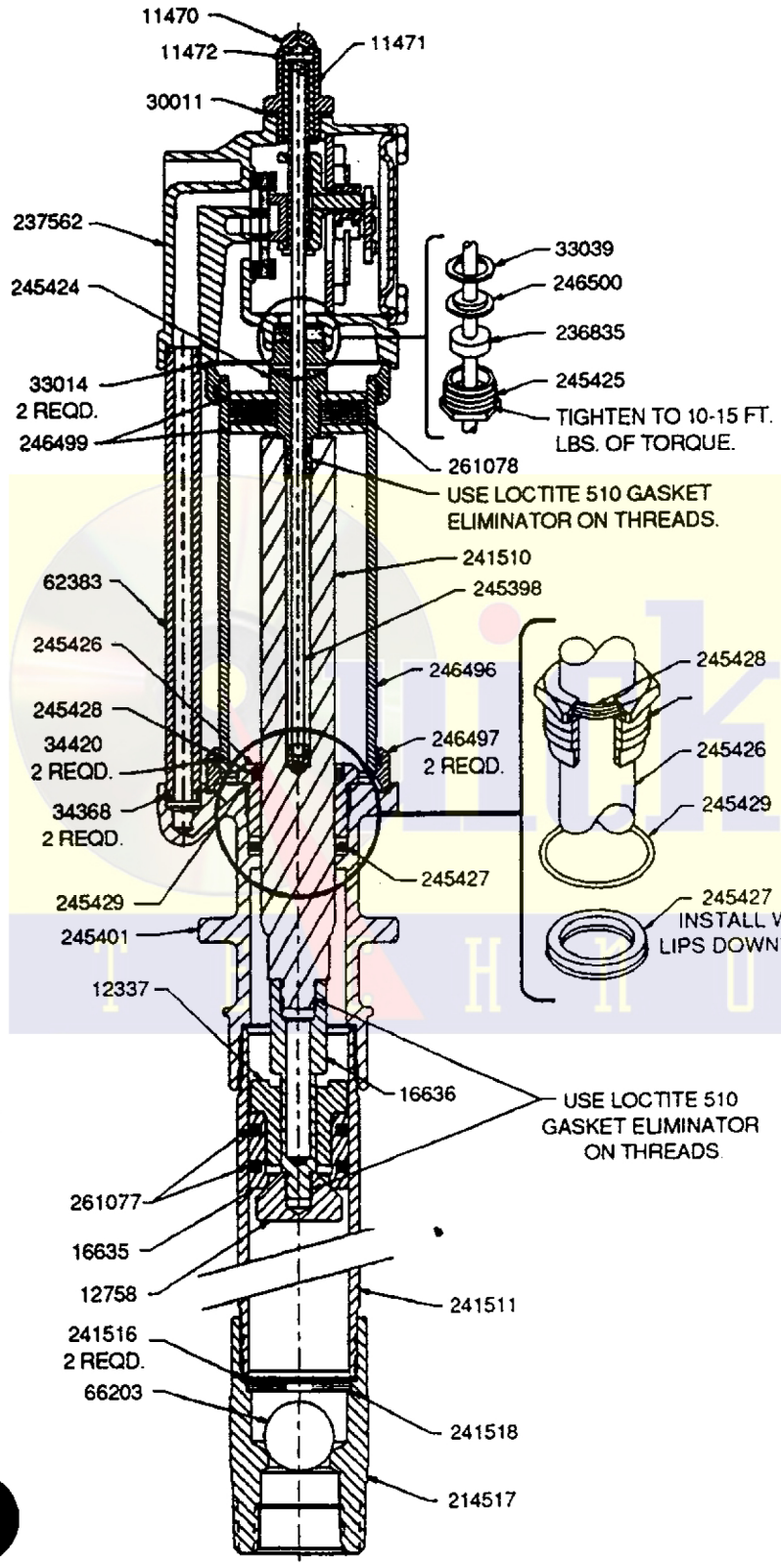

PARTS	QTY	DESCRIPTION
11470	1	Valve cap
11471	1	Trip collar
11472▲	1	Trip rod pin
11475	1	Trip shoe
11904	1	Packing nu
11947	1	Trip sleeve
12337	1	Spring stop
12758▲	1	Piston seat
16635▲	1	Piston
16636	1	Connecting rod
30003▲	1	Packing nut gasket
30011▲	1	Valve cap gasket
33014▲	2	Gasket
33039▲	1	Gasket
34420▲	2	O-ring
34110▲	1	Packing (Nitrile)
34158▲	1	O-ring (Neoprene)
34368▲	2	O-ring (Nitrile)
38162▲	1	Valve gasket
45605	1	Valve guide plate
48237	1	Packing washer
51009	4	Nut
55138	4	Spring
56038▲	2	Spring
62383	1	Air passage tube
66010▲	2	Steel ball
66203	1	Steel ball
84120	1	Valve slide & seat
91331	1	Toggle assembly
236286	1	Cover
236615	1	Muffler cover
236833	1	Muffler
236835▲	1	Packing (Nitrile)
236868	4	Screw
236869	4	Screw
236870	4	Valve seat screw
237562	1	Air valve casting
241510	1	Piston rod
241511	1	Pump tube
241512	4	Tie rod
241516▲	2	Pump tube gasket
241517	1	Foot valve body
241518	1	Ball stop
245398	1	Trip rod
245401	1	Outlet casting
245424	1	Piston bolt
245425	1	Trip rod packing nut
245426	1	Gland packing nut
245427▲	1	U-cup
245428▲	1	Quad-ring
245429▲	1	O-ring
246496	1	Air cylinder
246497	2	Cylinder ring
246499	2	Air piston washer
246500▲	1	Washer
246546	1	Packing cap
261077▲	2	Packing (Nitrile)
261078	1	Air piston packing

▲ Included in 83071 Repair Kit.

One Lincoln Way
St. Louis, Missouri 63120-1578
Customer Service (314) 679-4300

SECTION - 1
AIR OPERATED PUMPS

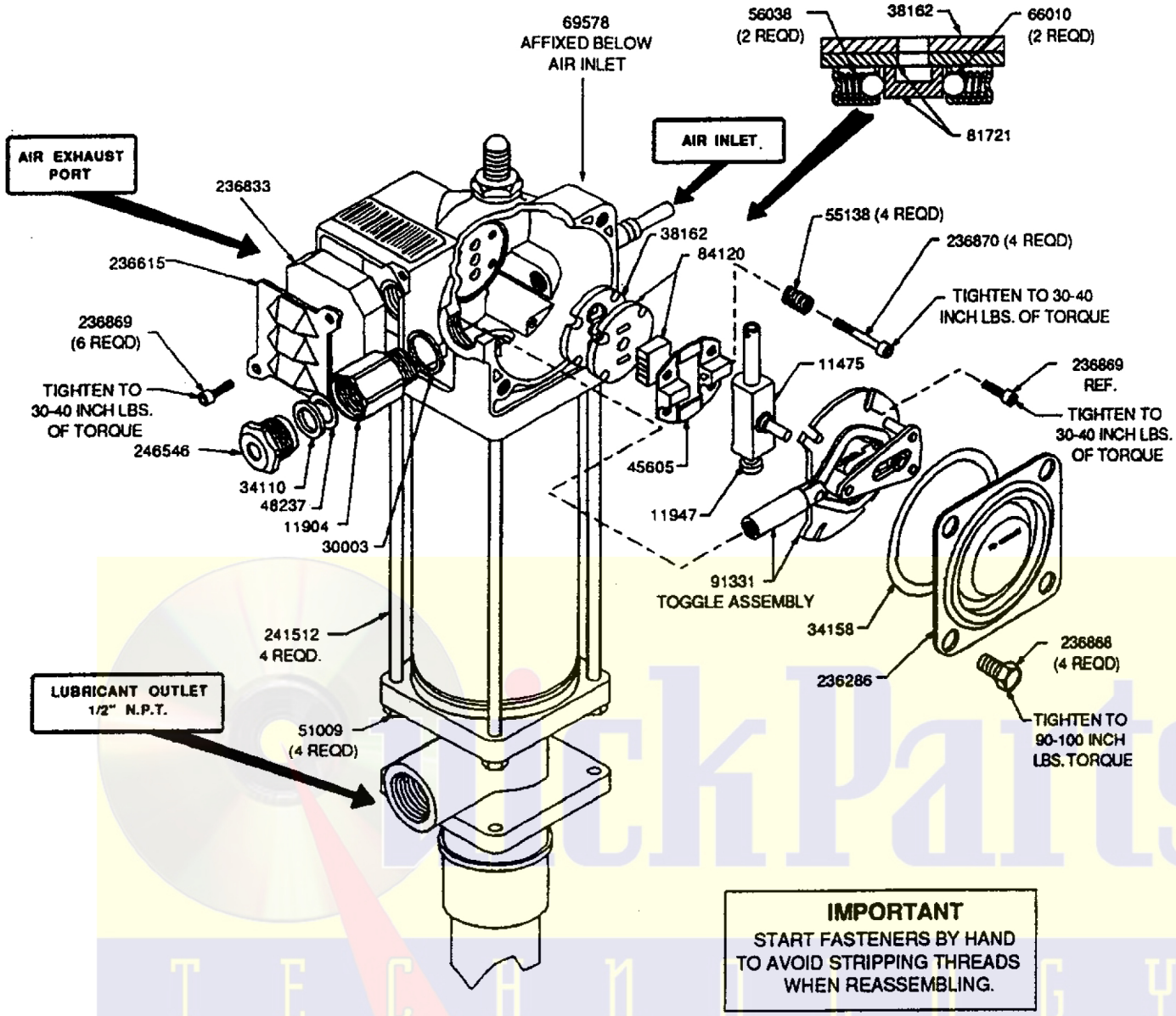

IMPORTANT
START FASTENERS BY HAND TO AVOID STRIPPING THREADS WHEN REASSEMBLING.

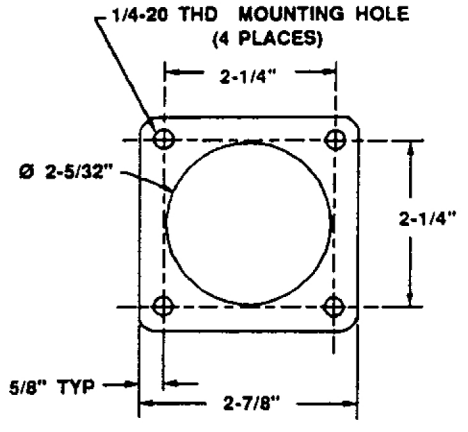

MOUNTING HOLE DIMENSIONS

TO LUBRICATE AIR VALVE MECHANISM

A. DISCONNECT AIR TO PUMP.

B. PERFORM PRESSURE RELIEF PROCEDURE.

C. REMOVE FOUR COVER SCREWS, COVER PLATE AND COVER PLATE GASKET.

D. PACK GREASE BEHIND TOGGLE PLATE. USE APPROX. 2-1/2 OUNCES OF N.L.G.I. NO. 1 (LIGHT GRADE) WATER REPELLENT GREASE 220, SP2.

E. IF TOGGLE PLATE HAS BEEN REMOVED FROM AIR VALVE CASTING, PACK CAVITY WITH GREASE BEFORE REPLACING TOGGLE PLATE.

F. REPLACE COVER PLATE GASKET, COVER PLATE AND COVER SCREWS. TIGHTEN TO PREVENT AIR LEAKS.

G. PERIODIC INSPECTION OF PARTS AT LEAST ONCE A YEAR IS ADVISED.

QuickParts TECHNOLOGY

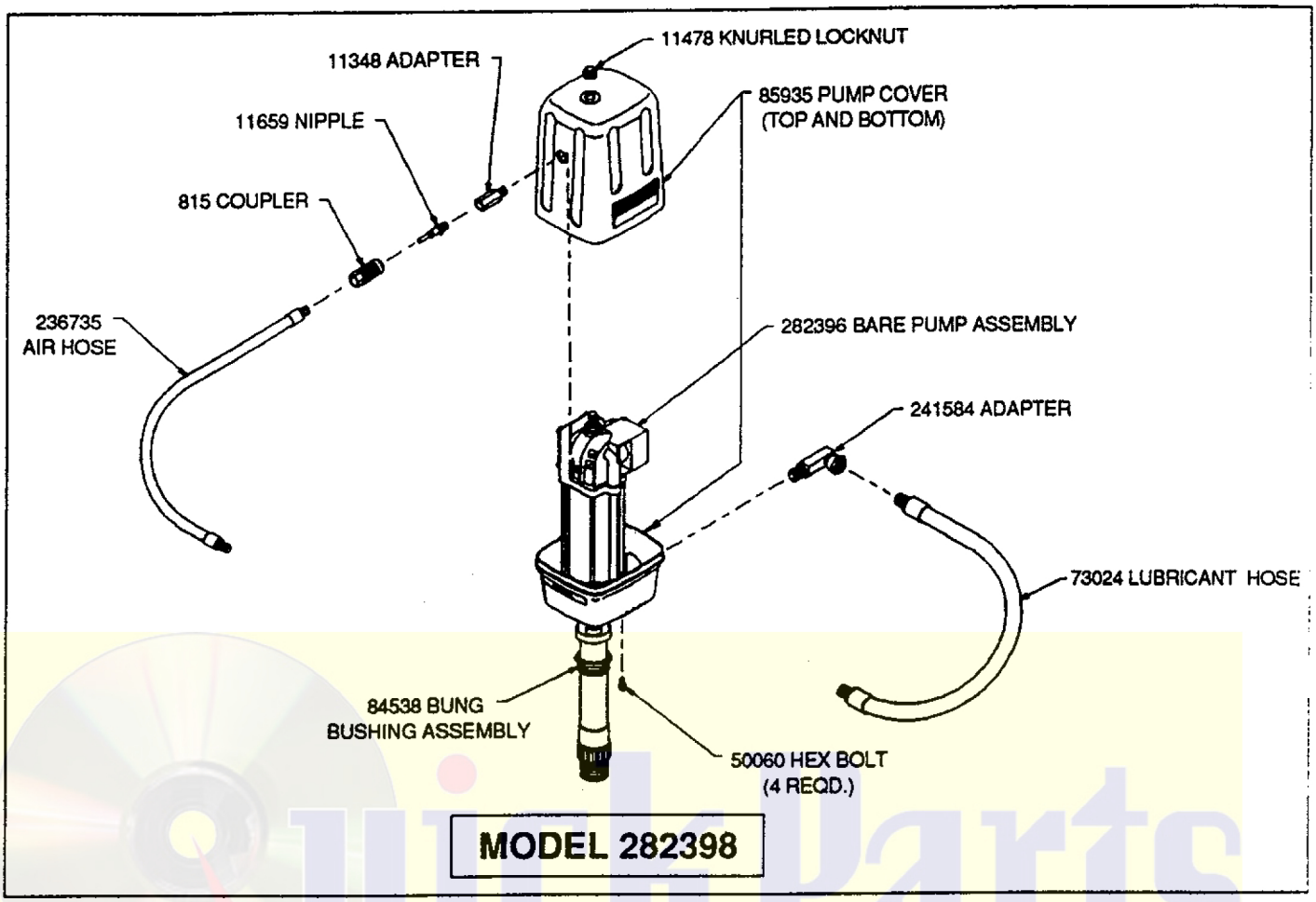

PRESSURE RELIEF PROCEDURE

Always perform this procedure when the pump is shut off and before checking, servicing, installing, cleaning or repairing any part of this system.

Perform the following procedure:

A. Disconnect the air supply to the pump.

B. Point the dispensing valve away from yourself and others.

C. Open the dispensing valve into an appropriate container until the pressure is relieved.

If the above procedure does not relieve the pressure, the dispensing valve or hose may be restricted. To relieve the pressure, very slowly loosen the hose end coupling. Then loosen completely and clear the dispensing valve and/or hose.

DISASSEMBLY

⚠ WARNING

To prevent personal injury, perform PRESSURE RELIEF PROCEDURE before and after operating the pump and before performing any disassembly or assembly.

NOTE

If complete disassembly is required, order the repair kit and replace ALL gaskets, O-rings and packings.

A. Remove valve cap (11470), trip rod pin (11472) and trip collar (11471).

B. Remove four tie nuts (51009) from tie rods (241512).

C. Unscrew trip sleeve (11947) from the trip rod (245398) and lift air valve casting (237562) off of air cylinder (246496).

D. Remove packing nut (11904) and packing cap (246546) from air valve casting. Remove the packing (34110) and packing washer (48237).

E. Remove four screws (236868) and cover (236286) with the O-ring (34158).

F. Remove four screws (236869), toggle plate (91331), trip shoe (11475) and trip sleeve (11947).

G. Remove four valve seat screws (236870), four springs (55138), valve guide plate (45605) with two springs (56038), two balls (66010) and valve slide and seat with gasket (84120).

H. Unscrew trip rod packing nut (245425) from air valve casting and remove all packing and gaskets.

I. Unscrew foot valve body (241517) and pump tube (241511) from outlet casting (245401).

J. Remove air cylinder (246496) and air passage tube (62383) from outlet casting.

K. Place wrench on piston seat (12758) and connecting rod (16636). Remove piston seat (12758) and piston (16635) with two packings (261077) and spring stop (12337).

L. Place wrench on piston bolt (245424) and piston rod (241510) and remove piston bolt (245424), piston packing (261078), two washers (48212) and trip rod (245398).

M. Unscrew gland packing nut (245426) from outlet casting and remove all gland seal parts.

TROUBLESHOOTING

If the following procedures do not correct the problem, contact a factory authorized service center. When submitting equipment to be repaired, be sure to state the nature of the problem and indicate if a repair cost estimate is required.

PROBLEMS

AIRMOTOR DOES NOT OPERATE.

- Check air supply to pump.
- Check trip rod pin (11472), trip rod (245398) and toggle assembly (91331) for breakage or loose parts.

AIR SEEPAGE FROM AIR EXHAUST WHILE PUMP IS NOT OPERATING

- Check valve slide and seat and gasket (84120), trip rod packing (236835) and washer (246500). Replace if necessary.

LOSS OF PRESSURE, VOLUME OR CONTINUOUS OPERATION OF PUMP WHEN NOT IN NORMAL USE.

- Clean piston seat and ball foot valve.
- If worn or damaged, replace piston (16635), piston seat (12758) and piston packings (261077).
- Check inside diameter of pump tube (241511). If scored, replace pump tube.

EXCESSIVE AMOUNT OF AIR IN LUBRICANT OR EXCESSIVE AMOUNT OF LUBRICANT COMING FROM AIR EXHAUST.

NOTE
Some lubricant exhausts with air normally.

- Replace U-cup (245427), O-ring (245429) and Quad-ring (245428).

ASSEMBLY

To reassemble, perform DISASSEMBLY procedures in reverse.

REPAIR

Repair is limited to replacement of listed service parts. Special procedures and tools are required. Contact Lincoln Customer Service, One Lincoln Way, St. Louis, MO 63120-1578, (314) 679-4300 for your nearest authorized service center.

When ordering replacement parts, list: part number, description, model number and series letter.

Truck Parts
TECHNOLOGY

LIMITED WARRANTY

Lincoln, A Pentair Company, warrants that lubrication equipment, materials dispensing equipment and other related equipment manufactured by it will be free from defects in material and workmanship during the one (1) year following the date of purchase. If equipment proves to be defective during this warranty period, it will be repaired or replaced without charge, provided that factory examination indicates the equipment to be defective. To obtain repair or replacement, it must be shipped, transportation charges prepaid, with proof of date of purchase to a Lincoln authorized Warranty and Service Center, within the one (1) year following the date of purchase.

This warranty is extended to the original retail purchaser only. This warranty does not apply to equipment damaged from accident, overload, abuse, misuse, negligence, faulty installation or abrasive or corrosive materials, or to equipment repaired or altered by anyone not authorized by Lincoln to repair or alter the equipment. This warranty applies only to equipment installed and operated according to the recommendations of Lincoln or its authorized field personnel. No other express warranty applies to lubrication equipment, materials dispensing equipment, and other related equipment manufactured by Lincoln.

ANY IMPLIED WARRANTIES applicable to lubrication equipment, materials dispensing equipment, and other related equipment manufactured by Lincoln INCLUDING THE WARRANTIES OF MERCHANTABILITY AND FITNESS FOR A PARTICULAR PURPOSE, WILL LAST ONLY FOR ONE (1) YEAR FROM THE DATE OF PURCHASE. SOME STATES DO NOT ALLOW LIMITATIONS ON HOW LONG AN IMPLIED WARRANTY LASTS, SO THE ABOVE LIMITATION MAY NOT APPLY TO YOU.

In no event shall Lincoln be liable for incidental or consequential damages. The liability of Lincoln on any claim for loss or damage arising out of the sale, resale, or use of lubrication equipment, materials dispensing equipment, and other related equipment shall in no event exceed the purchase price. SOME STATES DO NOT ALLOW THE EXCLUSION OR LIMITATION OF INCIDENTAL OR CONSEQUENTIAL DAMAGES, SO THE ABOVE LIMITATION OR EXCLUSION MAY NOT APPLY TO YOU.

THIS WARRANTY GIVES YOU SPECIFIC LEGAL RIGHTS AND YOU MAY ALSO HAVE OTHER RIGHTS WHICH VARY FROM STATE TO STATE.