Master Copy

BLACKHAWK®

repair parts

MODEL SJ4.05A–1 POWER UNIT FOR SJ-4, SJ-4-1 SERVICE JACKS

Supersedes Sheet S-259

USE ONLY BLACKHAWK LX-21 JACK OIL AND GENUINE FACTORY PARTS.

USE OF OTHER HYDRAULIC FLUIDS OR NON-GENUINE PARTS VOIDS WARRANTY. *NEVER USE BRAKE FLUID.*

Use of factory exchange power units recommended — See your Distributor or Franchised Service Depot.

Use 'V' packing (21, 27) and short disc (28) for power units having three 'V' packings.

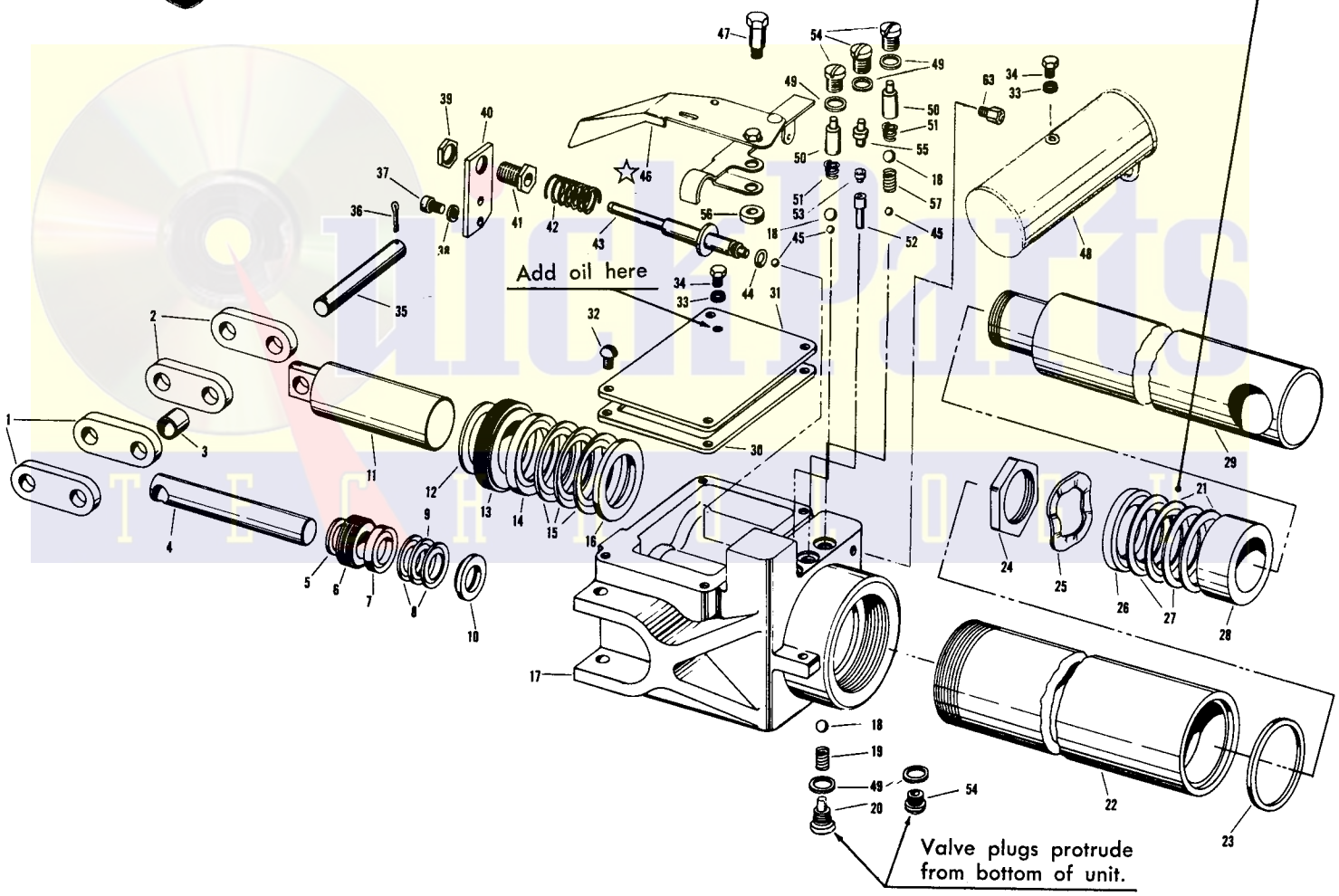

HOW TO IDENTIFY POWER UNIT:

Identified by valve plugs protruding from bottom of power unit base (20, 54), and has air accumulator (48). Power unit is fully sealed and does not require breather-type oil filler plug. Reservoir cover requires four screws.

TO ADD OIL:

1. Remove plug (34) on air accumulator (48) and pump out ram plunger approximately half-way to remove any oil from accumulator.
2. Remove oil filler plug (34) in reservoir cover (31) and completely retract ram plunger.
3. Add LX-21 hydraulic jack oil until about ¼" from bottom of reservoir cover. Replace plug.
4. If oil is dirty, thick, or gummy, remove and clean reservoir.

☆ See note reverse page.

REPAIR PARTS LIST FOR MODEL SJ4.05A-1 POWER UNIT

Item No.	Part No.	No. Req.	Description
1	A873.202	2	Link
2	A874.202	2	Link
3	A836.561	1	Spacer
4	A829.051	1	Plunger
* 5	A870.394	1	Oil Seal
6	A830.035	1	Nut
7	A831.043	1	Spreader
* 8	A832.033	2	'V' Packing, Leather
* 9	A915.033	1	'V' Packing, Rubber
10	A833.043	1	Spreader
11	A824.051	1	Plunger
* 12	A730.394	1	Oil Seal
13	A825.035	1	Nut
14	A826.043	1	Spreader
* 15	D866.041	3	'V' Packing, Leather
16	A798.043	1	Spreader
17	D347.005	1	Base
* 18	S1.16	3	$\frac{5}{16}$" Ball
* 19	A752.110	1	Spring
20	A939.006	1	Plug
* 21	D871.041	2	'V' Packing, Leather
22	A816.901	1	Cylinder
* 23	A817.394	1	Oil Seal
24	A823.035	1	Nut
25	A822.280	1	Spring
26	D878.043	1	Spreader
* 27	D872.041	2	'V' Packing, Rubber
28	D879.071	1	Disc
29	A818.040	1	Plunger
30	A835.161	1	Gasket
31	A834.162	1	Cover
32	A749.526	4	Screw
* 33	C9.37	1	Gasket
34	C9.22-2	2	Plug
35	A875.064	1	Pin
* 36	K18.58	2	Cotter Pin
37	A759.526	2	Screw
38	J66	2	Washer
39	AJ100.218	1	Nut
40	A839.433	1	Bracket
41	A756.232	1	Adj. Screw
42	A845.110	1	Spring
43	A740.010	1	Release Spindle
* 44	AJ100.312	1	"O" Ring
* 45	1.16	3	$\frac{7}{32}$" Ball
46	A966.900	1	Lever, Formed Steel
47	A840.042	1	Bolt
48	D344.900	1	Accumulator
* 49	B159.167	5	Gasket
50	A841.395	2	Spacer
* 51	BA85.183	2	Spring
52	A938.051	1	Plunger
* 53	A936.053	1	Cup
54	S4.185	4	Plug
55	D372.186	1	Spacer
56	A970.561	1	Spacer
* 57	D350.039	1	Spring
63	D346.096	1	Fitting

*For economy repair use Jack/Saver Kit SJ4K-3. Items included in Kit marked by asterisk.

☆ Power units with formed steel release lever and spacer, fig. 1, can replace power units on earlier SJ-3, SJ-4 Service Jacks by removing lever supplied with replacement and mounting malleable iron lever, fig. 2, from old unit.

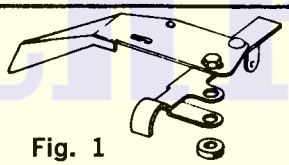

Fig. 1

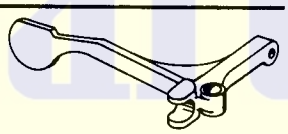

Fig. 2

WHEN ORDERING PARTS INCLUDE BOTH MODEL AND SERIAL NUMBER AS WELL AS PART NAME AND NUMBER

FRANCHISED SERVICE DEPOTS

FRANCHISED SERVICE DEPOT BLACKHAWK

For quality workmanship with genuine Blackhawk parts select a Franchised Blackhawk Service Depot for your repair work. Only repairs performed by a Franchised Service Depot displaying this official sign are backed with full factory guarantee. The Classified Section in your Phone Book lists your nearest Franchised Service Depot.

GUARANTEE

Blackhawk guarantees this Product against defects in workmanship and materials for 12 months from date of delivery to user. Except as noted all other products are guaranteed for 90 days from date of delivery. Chain is not guaranteed. When question of warranty arises, the user should send his unit to the nearest Blackhawk Franchised Service Depot for inspection, transportation to be prepaid and evidence of purchased date furnished.

If the difficulty comes under the terms of our guarantee, the Franchised Service Depot will *repair or replace parts affected* and return prepaid. Our guarantee does not cover ordinary wear and tear, abuse, misuse, overloading, altered products or use of improper fluid.

PARTS, SERVICE INFORMATION AND THE ADMINISTRATION OF FRANCHISED SERVICE DEPOTS FOR BLACKHAWK PRODUCTS IS PROVIDED BY —

BLACKHAWK SERVICE

MILWAUKEE, WISCONSIN 53246

DIVISION OF **APPLIED POWER** INDUSTRIES, INC.

Please direct all Service Correspondence to BLACKHAWK SERVICE

PS-259A—1.25M—764-8
Supersedes S-259

Copyright Blackhawk 1962

Printed in U.S.A.