Blackhawk Automotive™

BANNER™ BLACKHAWK AUTOMOTIVE

INSTRUCTION MANUAL
REPAIR PARTS LIST

12 TON BENCH PRESS

MODEL **B67617** (Without Hydraulics)

MODEL **B67616** (With Hydraulics)

⚠ WARNING

1. **Do not exceed rated capacity. Always use an accurate pressure gauge to measure pressing force.**
2. **Components of this press are specially designed to withstand rated capacity. Do not substitute bolts, pins, or any other components.**
3. **Always apply load on the center of ram plunger. Offset loads can damage ram or ram mount, and may cause work piece to eject.**
4. **Before applying load, be certain all press bed support pins are fully engaged, and hydraulic ram is fully threaded into ram mount.**
5. **Before operating, check for signs of cracked welds, bent bed pins, loose or missing bolts, or any other structural damage. Do not operate if any of these conditions exist. Have repairs made only by factory authorized service centers.**
6. **Remove all loads from press bed before attempting to adjust bed height. Beware of possible falling bed.**
7. **Press only on work piece supported by press bed.**
8. **When using accessories such as arbor plates, be certain they are centered on press bed, and are in full contact with the bed.**
9. **Parts being pressed may splinter, shatter, or be ejected from the press. Due to varied applications, it is your responsibility to always use adequate guards, wear eye protection and heavy protective clothing when operating this press.**
10. **Keep hands and fingers out of the press and away from parts thay may shift and pinch.**
11. **Do not stand in front of work area where load is applied.**
12. **It is your responsibility to keep warning decal legible and intact. Replacement decals may be obtained from the factory.**
13. **Study, understand, and follow all instructions provided with this equipment prior to operation.**
14. **Failure to heed these warnings may result in damage to the equipment, or failure resulting in property damage, personal, or fatal injury.**

OWNER'S RESPONSIBILITY

Operation. The owner and/or operator shall have an understanding of these operating instructions and warnings before operating the press. Warning information shall be emphasized and understood. If the user is not fluent in English, the instructions and warnings shall be read to and discussed with the operator in the operator's native language by the purchaser/owner, making sure that the operator comprehends its contents.

Maintenance. The press shall be maintained in accordance with instructions listed under "Maintenance."

Inspection

1. Visual inspection shall be made before each use of the press, checking for leaking hydraulic fluid, and damaged, loose or missing parts.
2. Each press, if subjected to an abnormal load shock, shall be inspected immediately by an authorized Blackhawk service center.
3. Owners and/or users should be aware that repair of this equipment may require specialized knowledge and facilities. It is recommended that an annual inspection of the press be made by an authorized service center and that any defective parts, decals or warning labels be replaced with genuine Blackhawk parts. A list of authorized service centers is available upon request.

Damaged Presses. Any press which appears to be damaged in any way, is found to be badly worn, or operates abnormally SHALL BE REMOVED FROM SERVICE until necessary repairs are made by an authorized service center.

Assembly. (See Illustration, Page 2)

1. Insert (4) legs (item 1) thru leg brackets (item 4), bed frames (item 2) and leg supports (item 5) as shown.
2. Install (4) nuts and lockwashers (items 6 and 7) and tighten finger tight.
3. Slide head assembly (item 8) over bottom flange of each upper bed frame channel (item 2). Install (2) locking bolts (item 9) and tighten enough to hold assembly together.
4. Slide assembly over the (4) legs.
5. Position (2) brackets (item 3) over the (4) legs with long flange facing down as shown.
6. Install (4) lockwashers and nuts (items 6 and 7) at top of legs.
7. Tighten all nuts.

For Presses Equipped with Hydraulics:

8. Screw ram into head assembly. By use of ram collar threads.

⚠ WARNING

PRIOR TO APPLYING LOAD BE SURE HYDRAULIC RAM COLLAR THREADS ARE FULLY ENGAGED TO HEAD ASSEMBLY.

9. Place hand pump on pump bracket and connect hose to ram quick coupler.

OPERATION

Head Assembly - The head assembly (item 8) is adjustable right to left. To adjust, loosen hex locking screws (item 9) and position head, always centering load on ram plunger saddle. After head assembly is positioned hex locking screws must be securely tightened.

MAINTENANCE

- Periodically check the press frame to make sure all nuts are tight and inspect for cracked welds, bent, loose, or missing parts.
- If the paint becomes badly chipped, it is suggested that unit be repainted. This will prevent rusting.
- Keep the hydraulic component operating area uncluttered and free of unnecessary equipment.
- Periodically check your hydraulic connections for possible leaks. Replace or properly repair damaged or leaking hydraulic components before using.
- Change hydraulic oil in your hydraulic system every 100 working hours, or more frequently in unusually dirty or dusty areas.

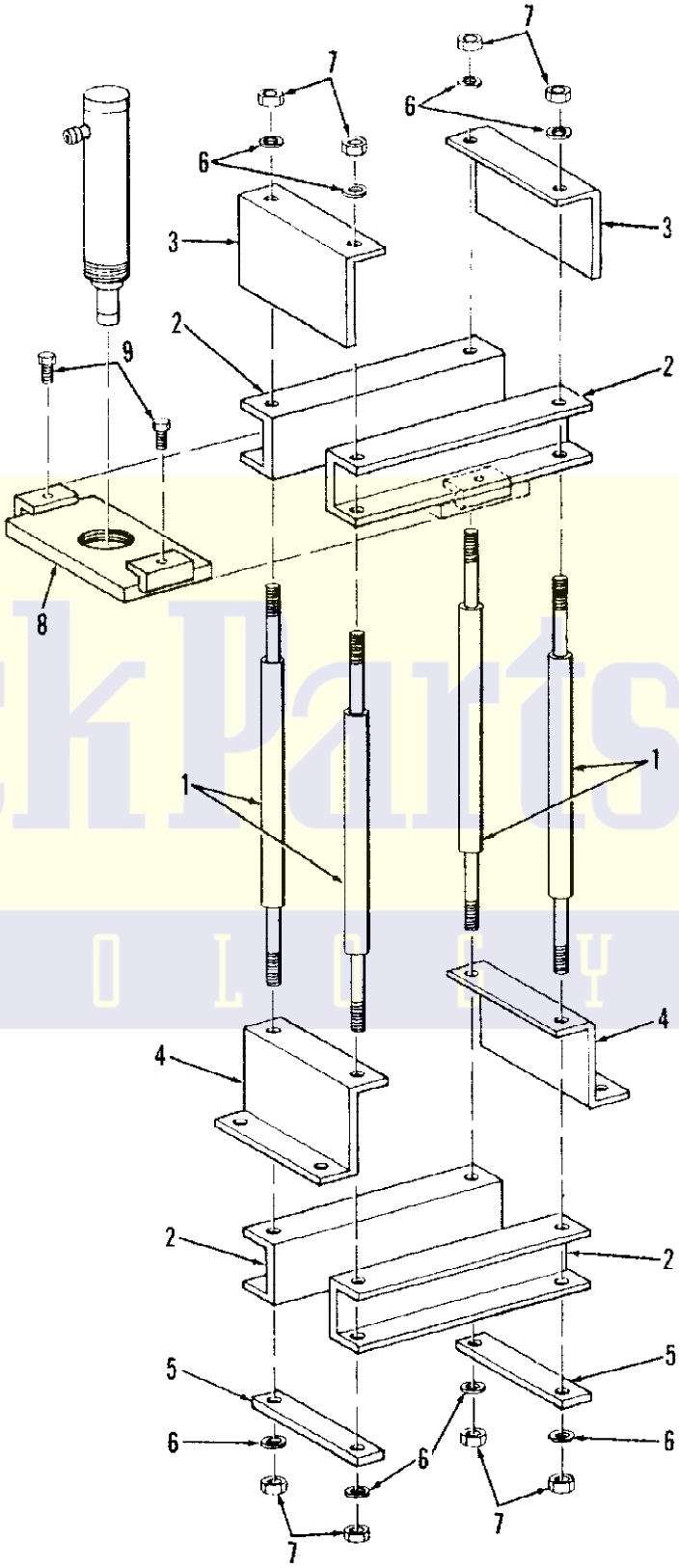

12 TON BENCH PRESS
MODEL B67617 (Without Hydraulics)
MODEL B67616 (With Hydraulics)

Item No.	Part Code	Description	Qty. Required
1	68733	Leg	4
2	H31845	Bed Frame	4
3	H31846	Bracket	2
4	H31847	Leg Bracket	2
5	H31848	Leg Support	2
6	H68738	Lockwasher, 3/4	8
7	H68739	Hex Nut, 3/4-10	8
8	H68740	Head Assembly	1
9	H68726	HCS 3/8-16 x 3/4	2
*10	H86844	Product Decal w/Hyd.	1
10A	H86845	Product Decal w/o Hyd.	1
*11	H31840	Warning Decal	2

*Not shown.

QuickParts TECHNOLOGY